P–7864
29094

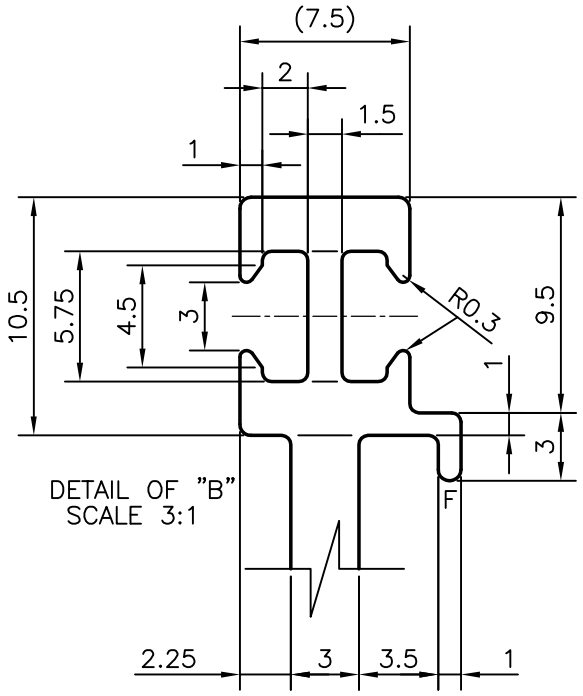

DETAIL OF "B"
SCALE 3:1

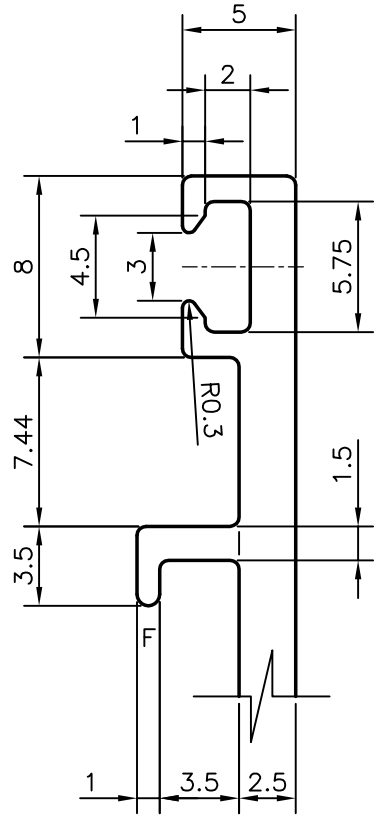

DETAIL OF "A"
SCALE 3:1

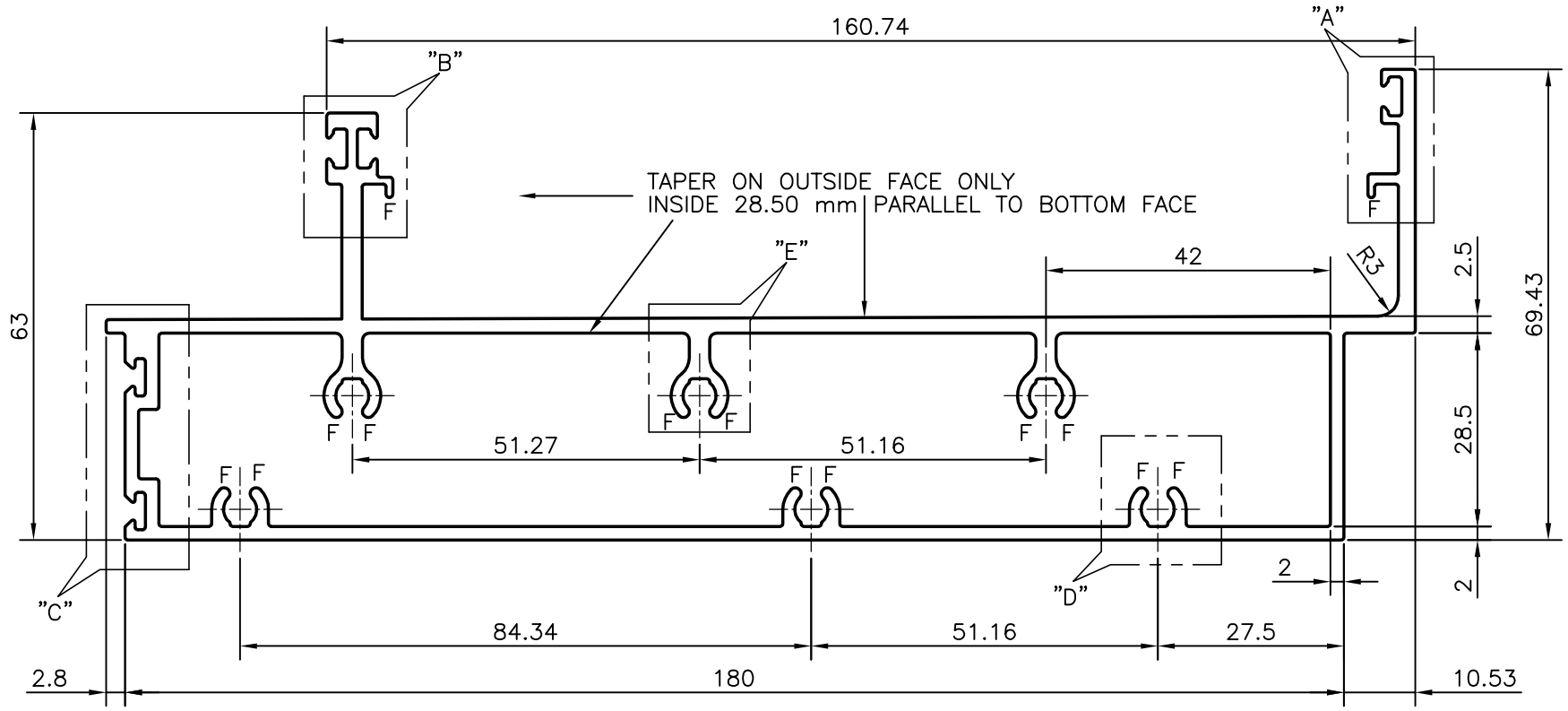

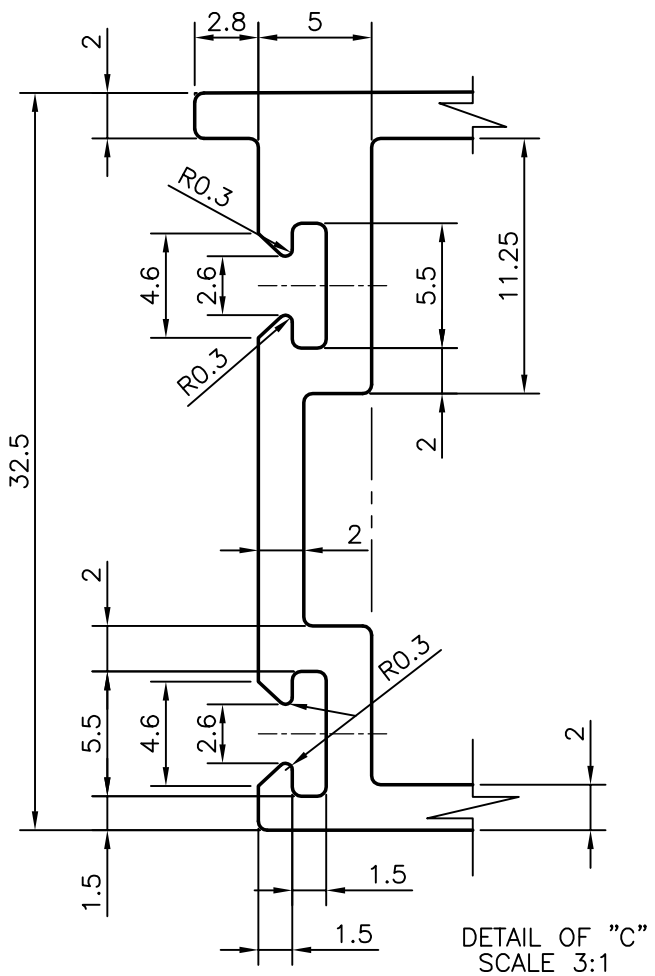

DETAIL OF "C"
SCALE 3:1

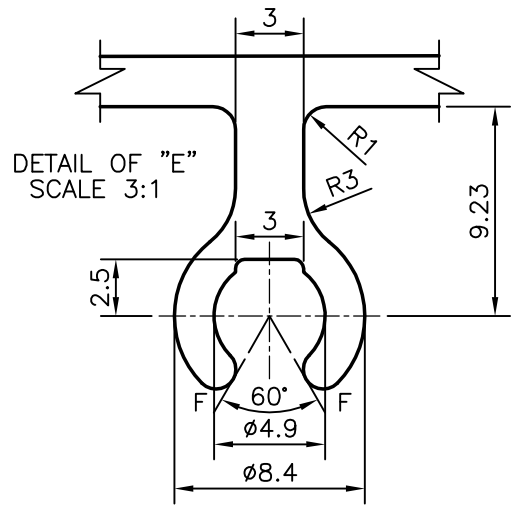

DETAIL OF "E"
SCALE 3:1

F = FULL RADIUS (14 PLACES)

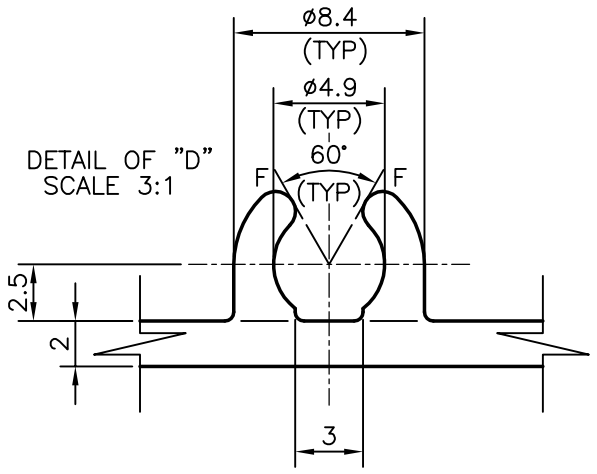

DETAIL OF "D"
SCALE 3:1

JINDAL SYMBOL OF QUALITY AN ISO 9001 COMPANY	*JINDAL ALUMINIUM LTD.* *BANGALORE–560073 (INDIA)*		NAME	DATE
		DRAWN	PRASANNA. H	30–01–2008
		CHECKED		
		APPROVED		
1. ALL DIMENSIONS ARE IN mm. 2. ROUND OFF ALL SHARP CORNERS WITH 0.40 mm. 3. TOLERANCES WILL BE AS PER IS:6477–1983 UNLESS OTHERWISE SPECIFIED		SCALE		1:1
		AREA mm^2		1363.648
		PERIMETER mm.		663.654
		WEIGHT kg/m		3.682
PARTY'S NAME	GLASS WALL SYSTEMS, MUMBAI	DRAWING No.		SECTION No.
PARTY'S DRAWING No.	GWS/P/GWS/D12	P–7864		–
ALLOY & TEMPER	HE9 WP	29094		29094
DESCRIPTION	ST. GLAZING GUTTER SECTION			