P–7901	
29097	

V = 'V'–GROOVE 0.5x90° (7 PLACES)
F = FULL RADIUS (7 PLACES)

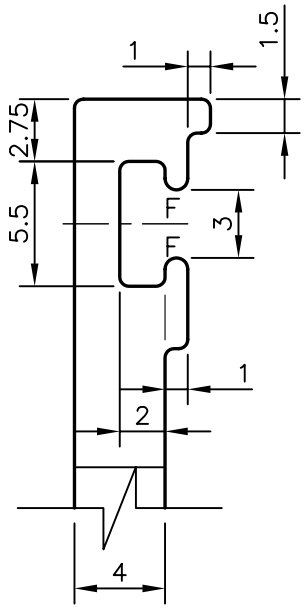

DETAIL OF "A"
SCALE 3:1

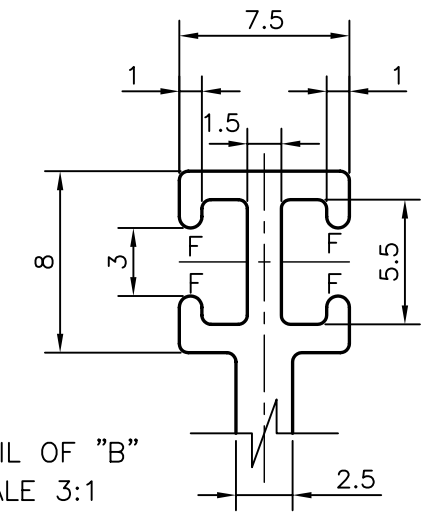

DETAIL OF "B"
SCALE 3:1

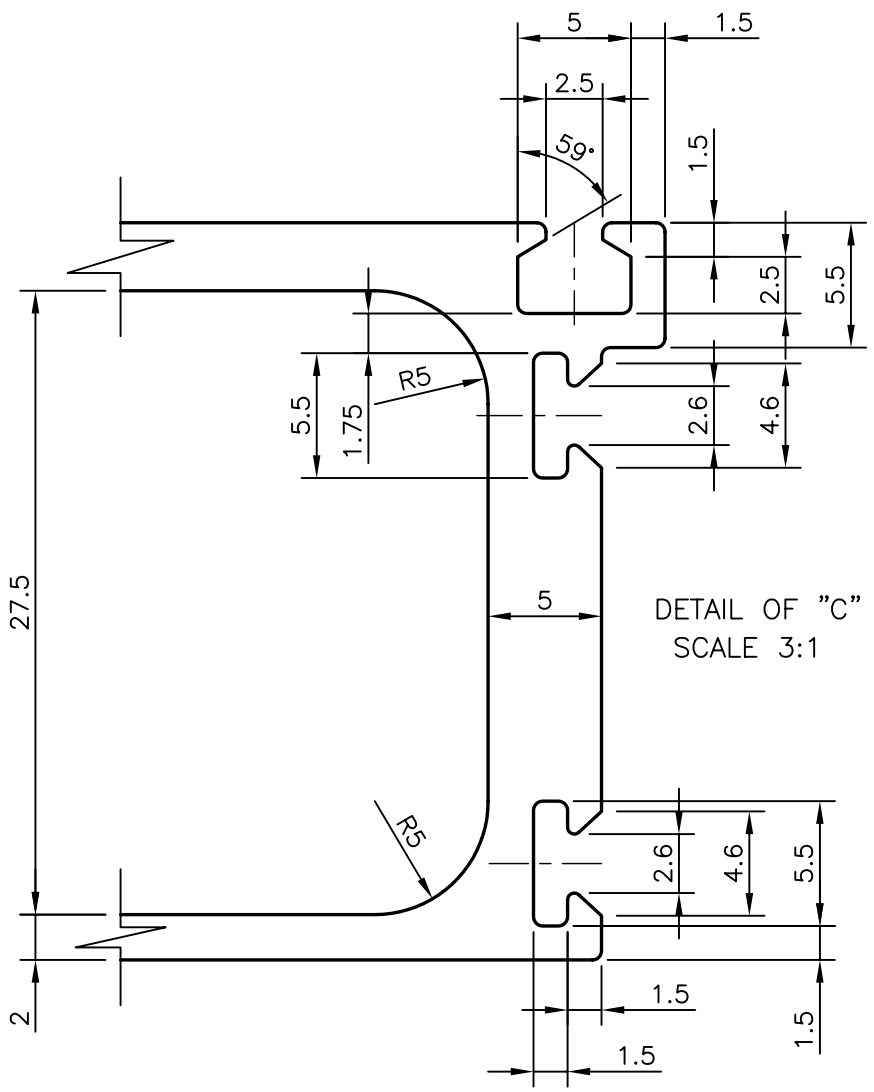

DETAIL OF "C"
SCALE 3:1

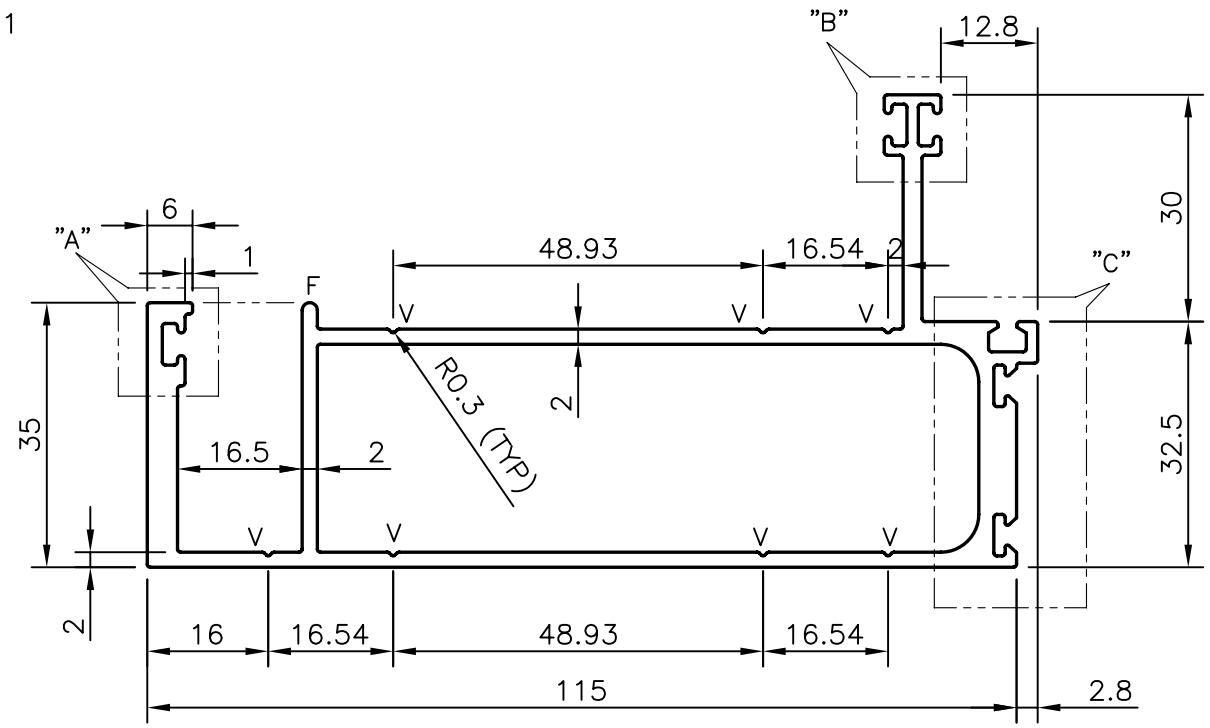

			NAME	DATE
JINDAL SYMBOL OF QUALITY AN ISO 9001 COMPANY	*JINDAL ALUMINIUM LTD.* *BANGALORE–560073 (INDIA)*	DRAWN	PRASANNA.H	12–02–2008
		CHECKED		
		APPROVED		
1. ALL DIMENSIONS ARE IN mm. 2. ROUND OFF ALL SHARP CORNERS WITH 0.40 mm. 3. TOLERANCES WILL BE AS PER IS:6477–1983 UNLESS OTHERWISE SPECIFIED		SCALE		1:1
		AREA mm^2		830.365
		PERIMETER mm.		503.205
		WEIGHT kg/m		2.242
PARTY'S NAME	GLASS WALL SYSTEMS, MUMBAI	DRAWING No.		SECTION No.
PARTY'S DRAWING No.	GWS/P/HCC/D1	P–7901		–
ALLOY & TEMPER	HE9 WP	29097		29097
DESCRIPTION	ST. GLAZING FEMALE MULLION			