P–7904	
29100	

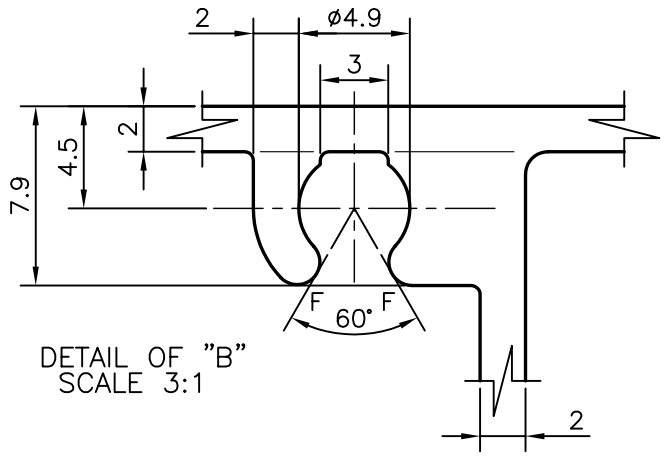

DETAIL OF "B"
SCALE 3:1

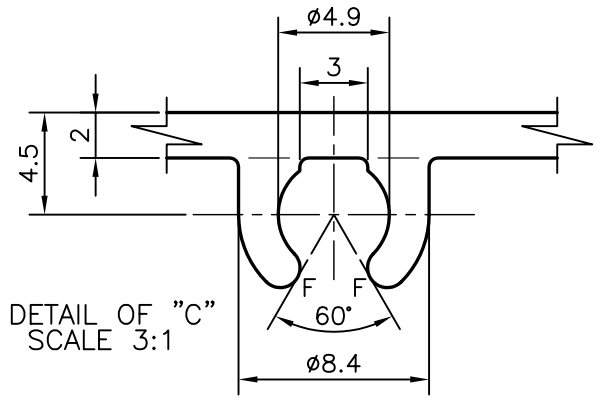

DETAIL OF "C"
SCALE 3:1

DETAIL OF "A"
SCALE 3:1

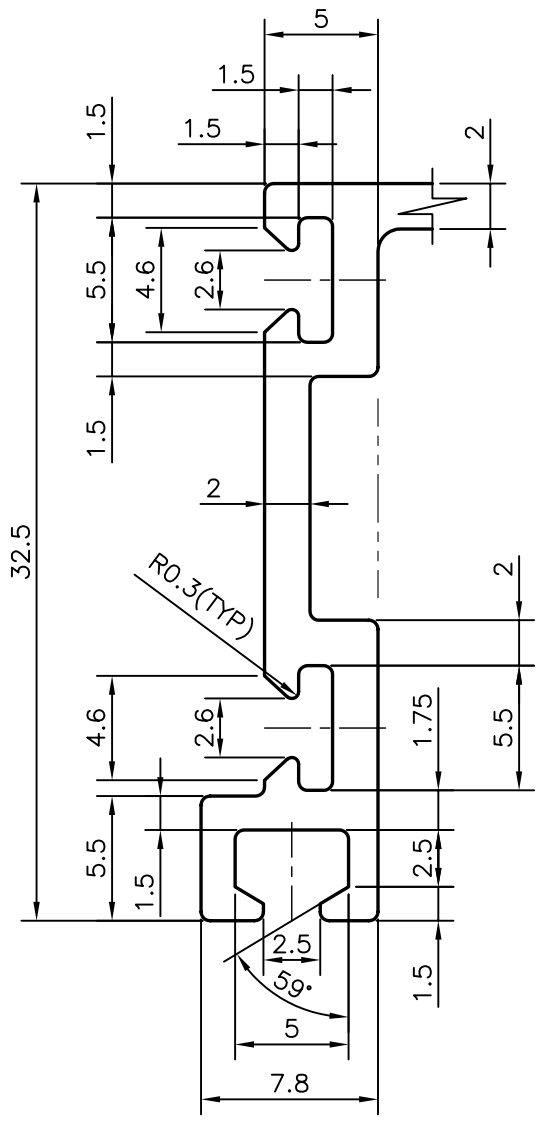

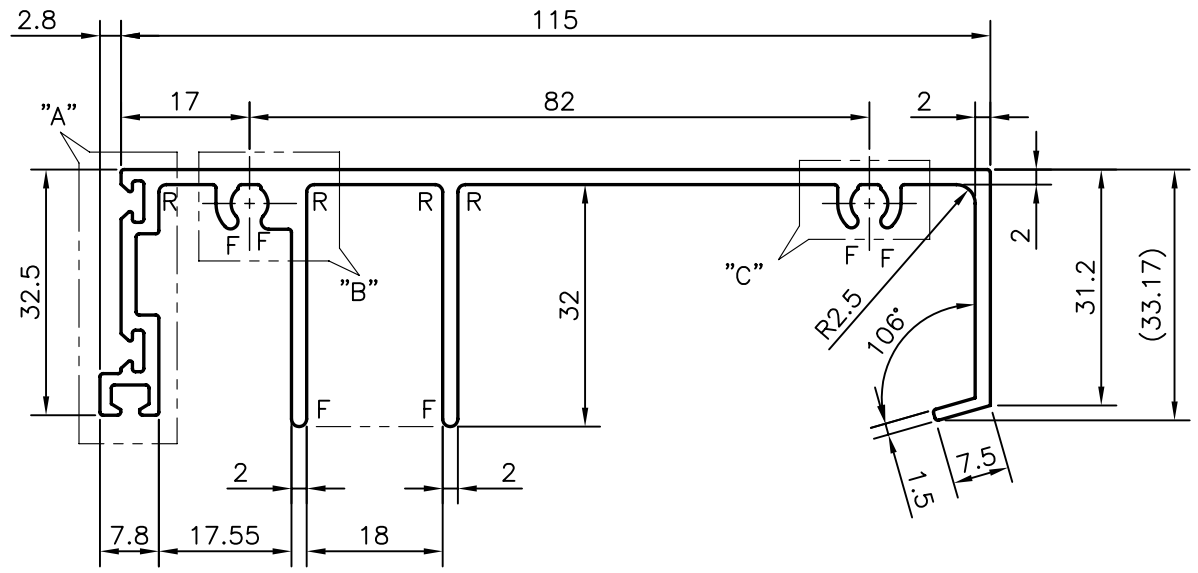

F = FULL RADIUS (6 PLACES)
R = R1.00 mm (4 PLACES)

			NAME	DATE
JINDAL SYMBOL OF QUALITY AN ISO 9001 COMPANY	*JINDAL ALUMINIUM LTD.* *BANGALORE–560073 (INDIA)*	DRAWN	PRASANNA.H	12–02–2008
		CHECKED		
		APPROVED		
1. ALL DIMENSIONS ARE IN mm. 2. ROUND OFF ALL SHARP CORNERS WITH 0.40 mm. 3. TOLERANCES WILL BE AS PER IS:3965–1981 UNLESS OTHERWISE SPECIFIED		SCALE		1:1
		AREA mm^2		575.341
		PERIMETER mm.		559.207
		WEIGHT kg/m		1.553
PARTY'S NAME	GLASS WALL SYSTEMS, MUMBAI	DRAWING No.		SECTION No.
PARTY'S DRAWING No.	GWS/P/HCC/D4	P–7904		–
ALLOY & TEMPER	HE9 WP	29100		29100
DESCRIPTION	ST. GLAZING SILL SECTION			