P−7906
29102

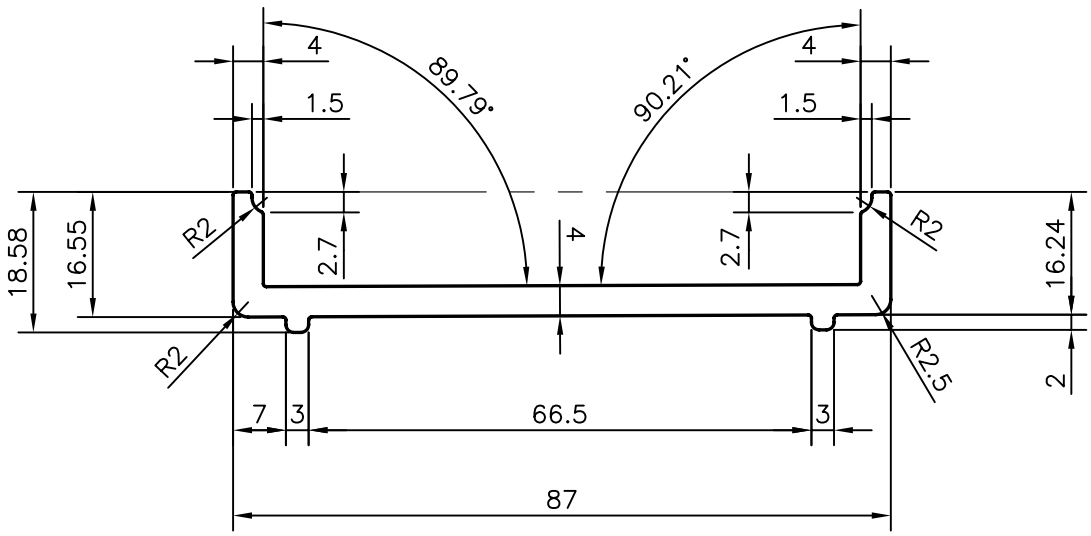

JINDAL SYMBOL OF QUALITY AN ISO 9001 COMPANY	*JINDAL ALUMINIUM LTD.* *BANGALORE−560073 (INDIA)*		NAME	DATE
		DRAWN	PRASANNA.H	12−02−2008
		CHECKED		
		APPROVED		
1. ALL DIMENSIONS ARE IN mm. 2. ROUND OFF ALL SHARP CORNERS WITH 0.40 mm. 3. TOLERANCES WILL BE AS PER IS:3965−1981 UNLESS OTHERWISE SPECIFIED		SCALE		1:1
		AREA mm^2		450.11
		PERIMETER mm.		232.732
		WEIGHT kg/m		1.215
PARTY'S NAME	GLASS WALL SYSTEMS, MUMBAI	DRAWING No.		SECTION No.
PARTY'S DRAWING No.	GWS/P/HCC/D6	P−7906		−
ALLOY & TEMPER	HE9 WP	29102		29102
DESCRIPTION	MISC. SECTION			