P–7947
29107

DETAIL OF "A"
SCALE 3:1

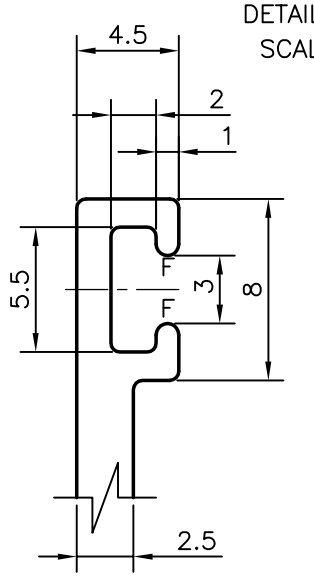

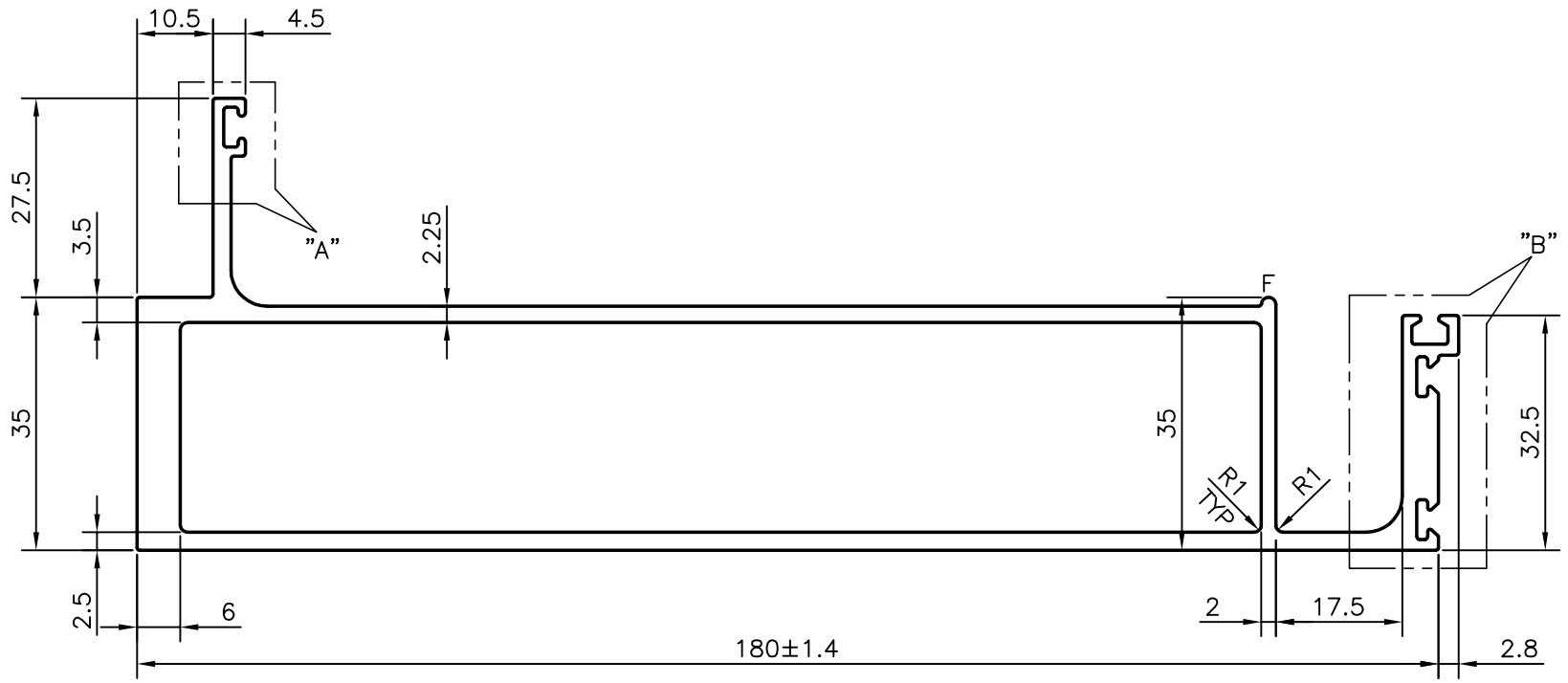

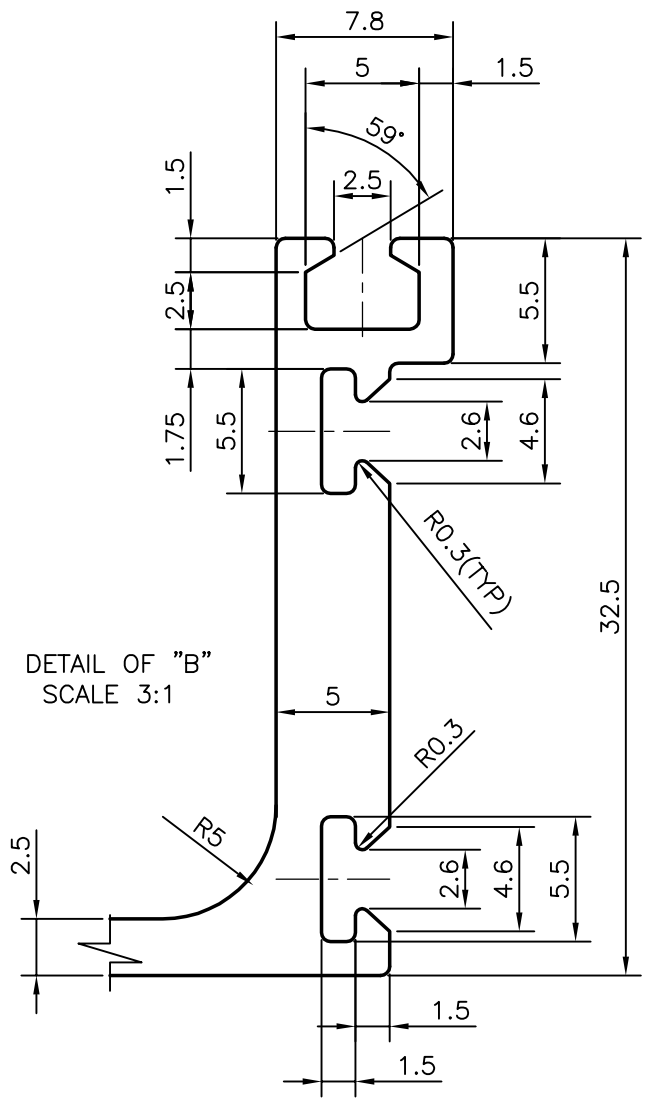

DETAIL OF "B"
SCALE 3:1

F = FULL RADIUS (3 PLACES)

UNSPECIFIED TOLERANCE TO BE ±0.35 mm

			NAME	DATE
SYMBOL OF QUALITY AN ISO 9001 COMPANY	*JINDAL ALUMINIUM LTD.* *BANGALORE–560073 (INDIA)*	DRAWN	PRASANN. H	27–02–2008
		CHECKED		
		APPROVED		
1. ALL DIMENSIONS ARE IN mm. 2. ROUND OFF ALL SHARP CORNERS WITH 0.40 mm. 3. TOLERANCES WILL BE AS PER IS:6477–1983 UNLESS OTHERWISE SPECIFIED		SCALE		1:1
		AREA mm^2		1258.719
		PERIMETER mm.		589.211
		WEIGHT kg/m		3.399
PARTY'S NAME	GLASS WALL SYSTEMS, MUMBAI	DRAWING No.		SECTION No.
PARTY'S DRAWING No.	GWS/P/IB/2B–MM	P–7947		–
ALLOY & TEMPER	HE9 WP	29107		29107
DESCRIPTION	ST. GLAZING MALE MULLION			