P-8002
29129

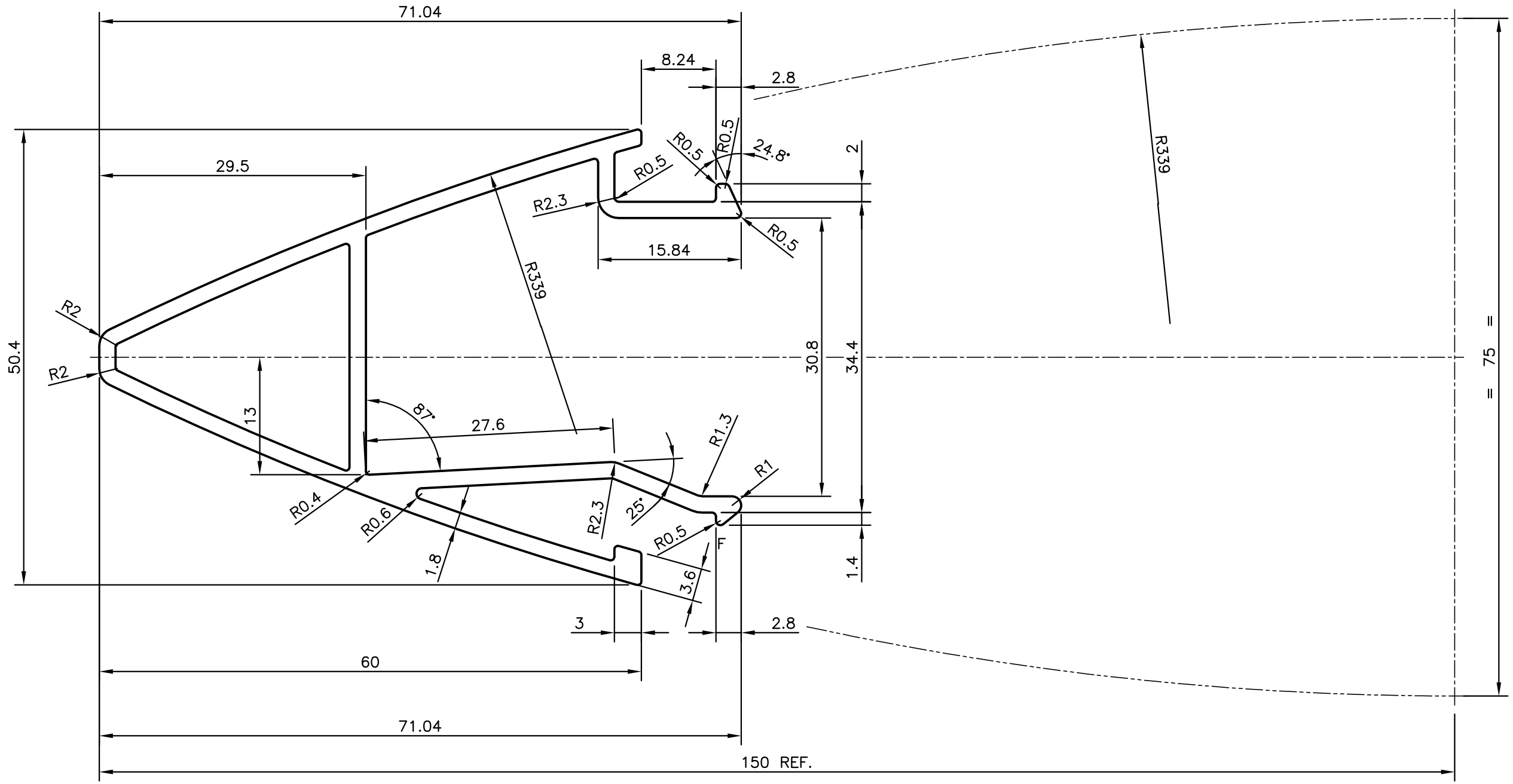

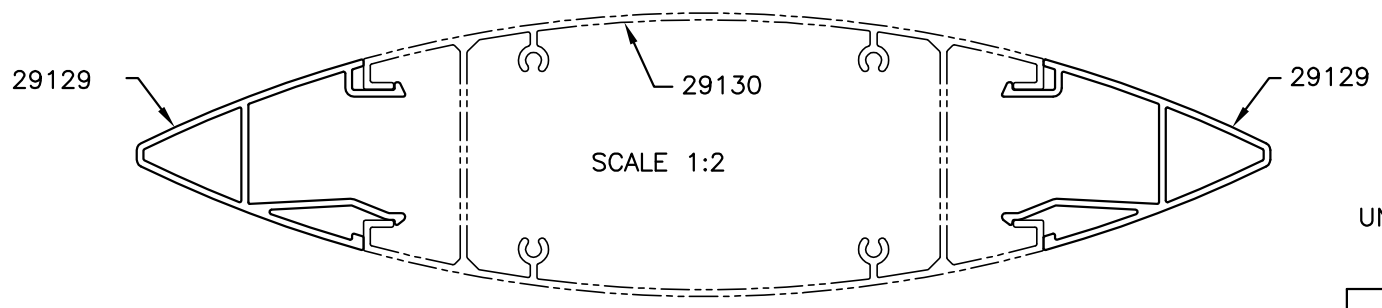

UNSPECIFIED WALL THICKNESS = 1.80 mm

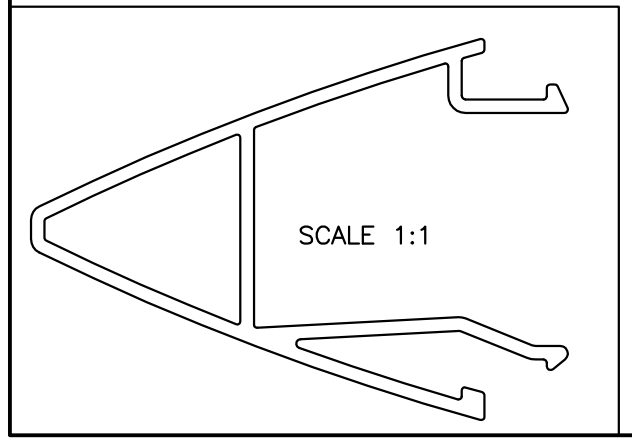

MATCHING SECTIONS

			NAME	DATE
JINDAL SYMBOL OF QUALITY AN ISO 9001 COMPANY	*JINDAL ALUMINIUM LTD.* *BANGALORE-560073 (INDIA)*	DRAWN	PRASANNA.H	12-03-2008
		CHECKED		
		APPROVED		
1. ALL DIMENSIONS ARE IN mm. 2. ROUND OFF ALL SHARP CORNERS WITH 0.40 mm. 3. TOLERANCES WILL BE AS PER IS:6477-1983 UNLESS OTHERWISE SPECIFIED		SCALE		2:1
		AREA mm^2		404.16
		PERIMETER mm.		348.261
		WEIGHT kg/m		1.091
PARTY'S NAME	SP FABRICATORS PVT. LTD., THANE	DRAWING No.		SECTION No.
PARTY'S DRAWING No.	AL-435/REV-02	P-8002		–
ALLOY & TEMPER	6063 T6	29129		29129
DESCRIPTION	FIN PROFILE			