P-6746-1

29161

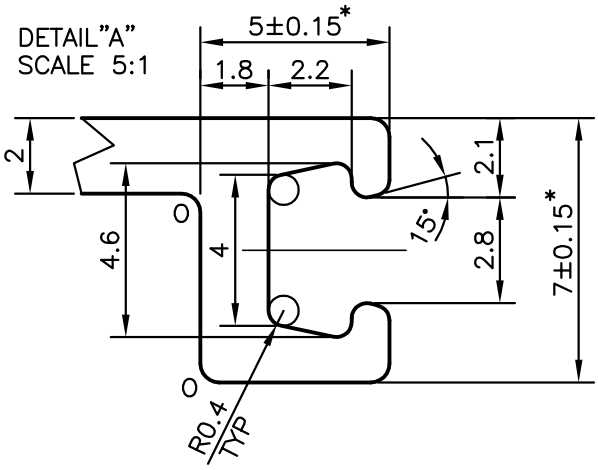

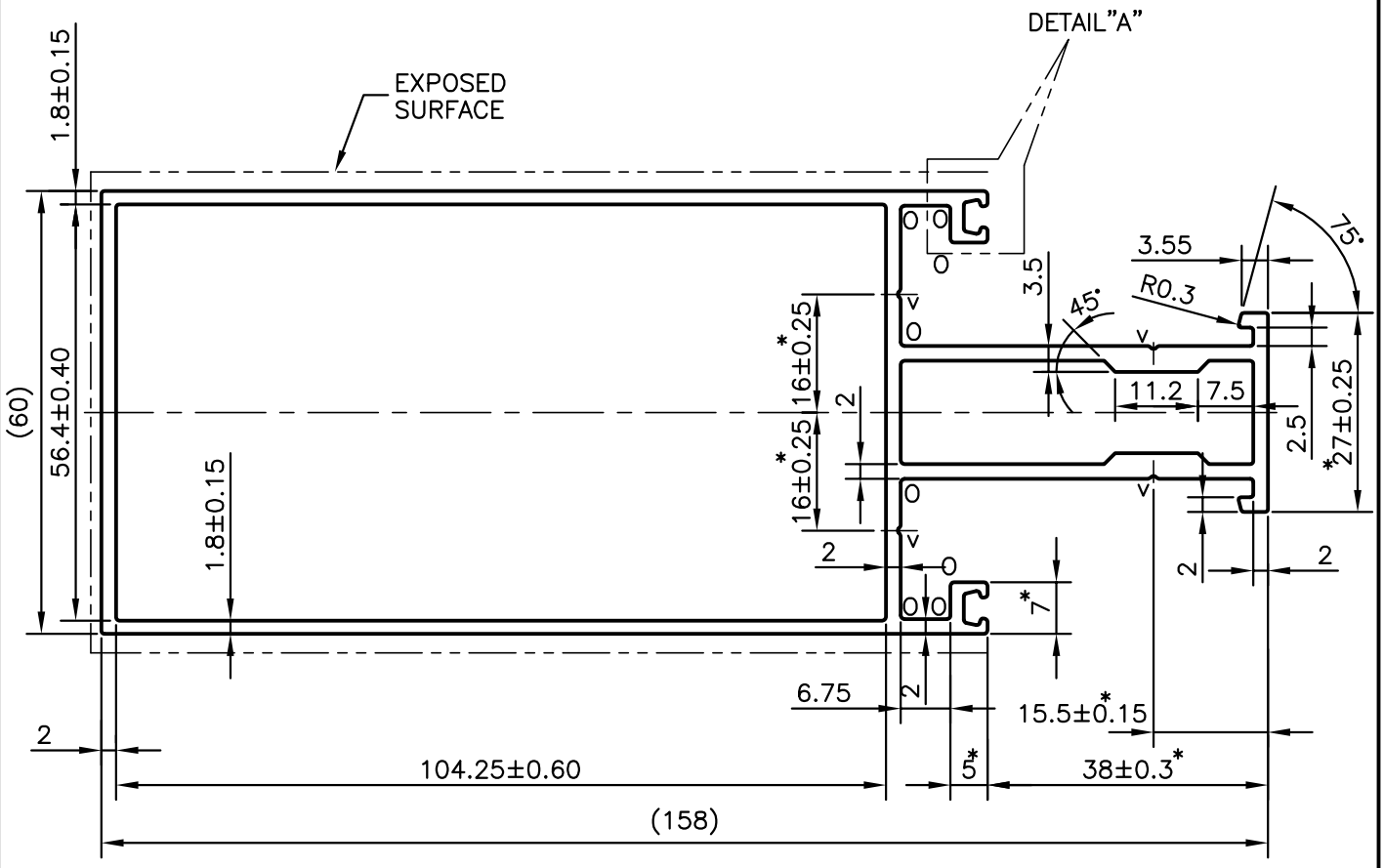

* MARKED DIMENSIONS ARE CRITICAL
O = 0.50mm RADIUS (8 PLACES)
V = VEE GROOVE 0.40x90° (4 PLACES)

			NAME	DATE
JINDAL SYMBOL OF QUALITY AN ISO 9001 COMPANY	*JINDAL ALUMINIUM LTD.* *BANGALORE-560073 (INDIA)*	DRAWN	RAGHAVENDRA	20-11-2006
		CHECKED		
		APPROVED		

1. ALL DIMENSIONS ARE IN mm.
2. ROUND OFF ALL SHARP CORNERS WITH 0.40 mm.
3. TOLERANCES WILL BE AS PER DIN-17615 UNLESS OTHERWISE SPECIFIED

SCALE	1:1
AREA mm^2	977.081
PERIMETER mm.	540.863
WEIGHT kg/m	2.638

PARTY'S NAME	SP FABRICATORS PVT. LIMITED, NAVI MUMBAI
PARTY'S DRAWING No.	AL-280
ALLOY & TEMPER	6063 T6
DESCRIPTION	MULLION PROFILE

DRAWING No.	SECTION No.
P-6746-1	–
29161	29161