P–7946
29164

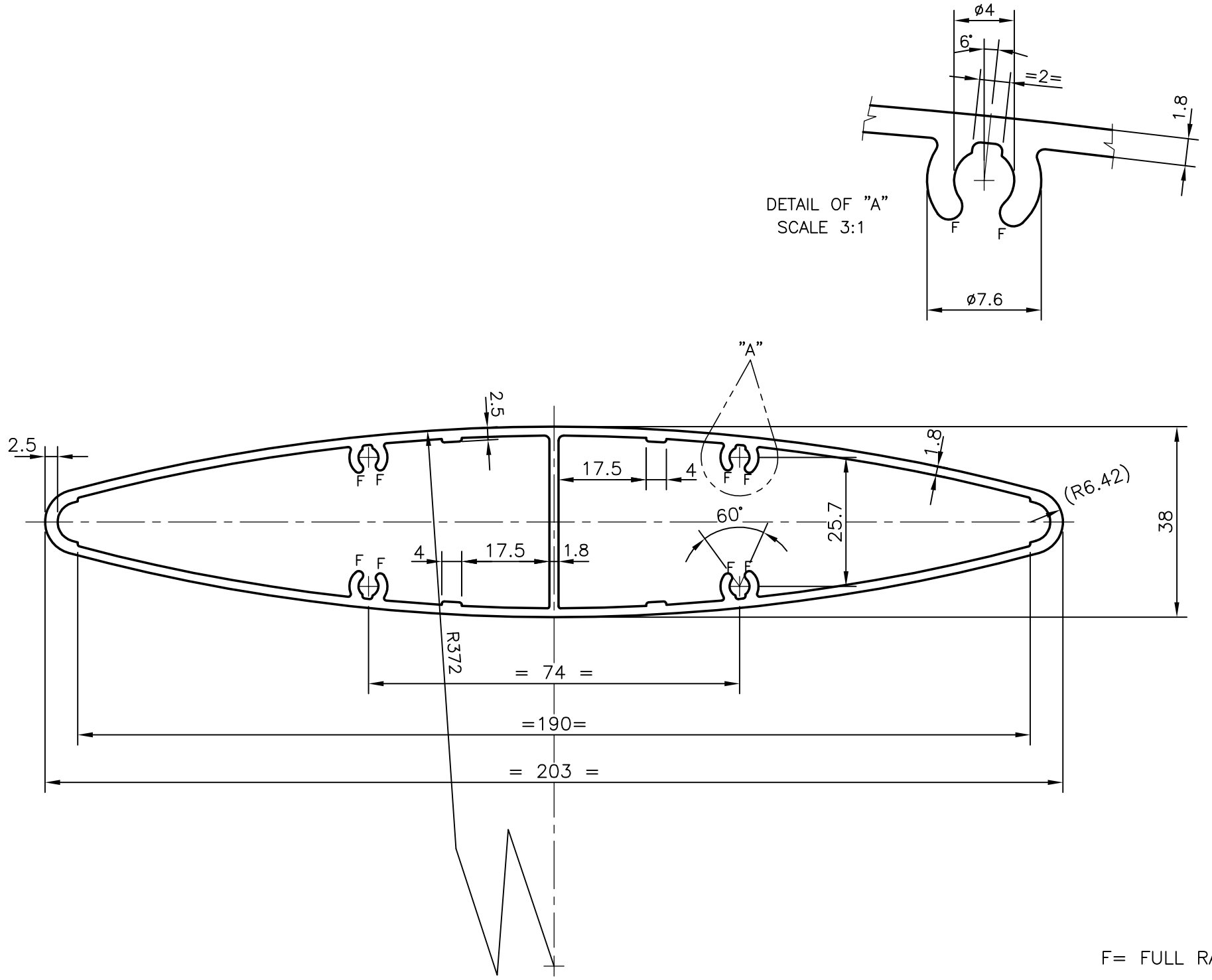

F= FULL RADIUS (4 PLACES)

			NAME	DATE
SYMBOL OF QUALITY AN ISO 9001 COMPANY	*JINDAL ALUMINIUM LTD.* *BANGALORE–560073 (INDIA)*	DRAWN	J.P.KAUSHIK	26–02–2008
		CHECKED		
		APPROVED		

1. ALL DIMENSIONS ARE IN mm.
2. ROUND OFF ALL SHARP CORNERS WITH 0.40 mm.
3. TOLERANCES WILL BE AS PER IS:6477–1983 UNLESS OTHERWISE SPECIFIED

SCALE	1:1
AREA mm^2	929.939
PERIMETER mm.	425.08
WEIGHT kg/m	2.511

PARTY'S NAME	CONSTRUCTION SPECIALITIES INTERNATIONAL, MUMBAI
PARTY'S DRAWING No.	AF 200E0010
ALLOY & TEMPER	6063 T6
DESCRIPTION	MISC. OVAL TUBE

DRAWING No.	SECTION No.
P–7946	–
29164	29164