P-6450-1
X599
29260

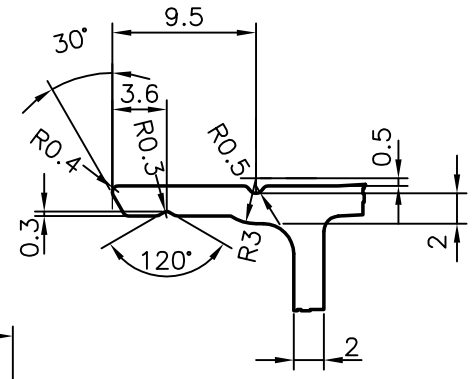

DETAIL `C'

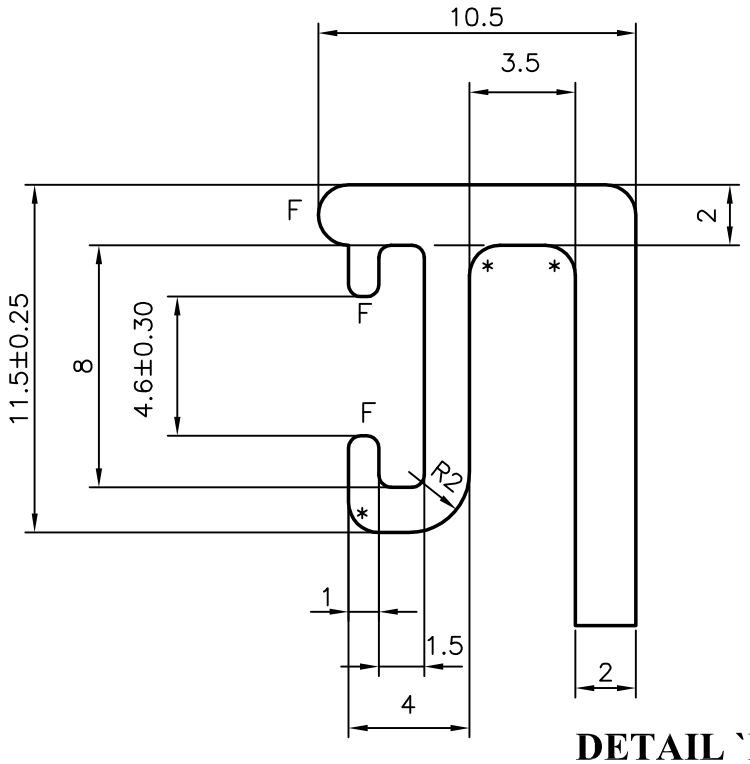

DETAIL `D'

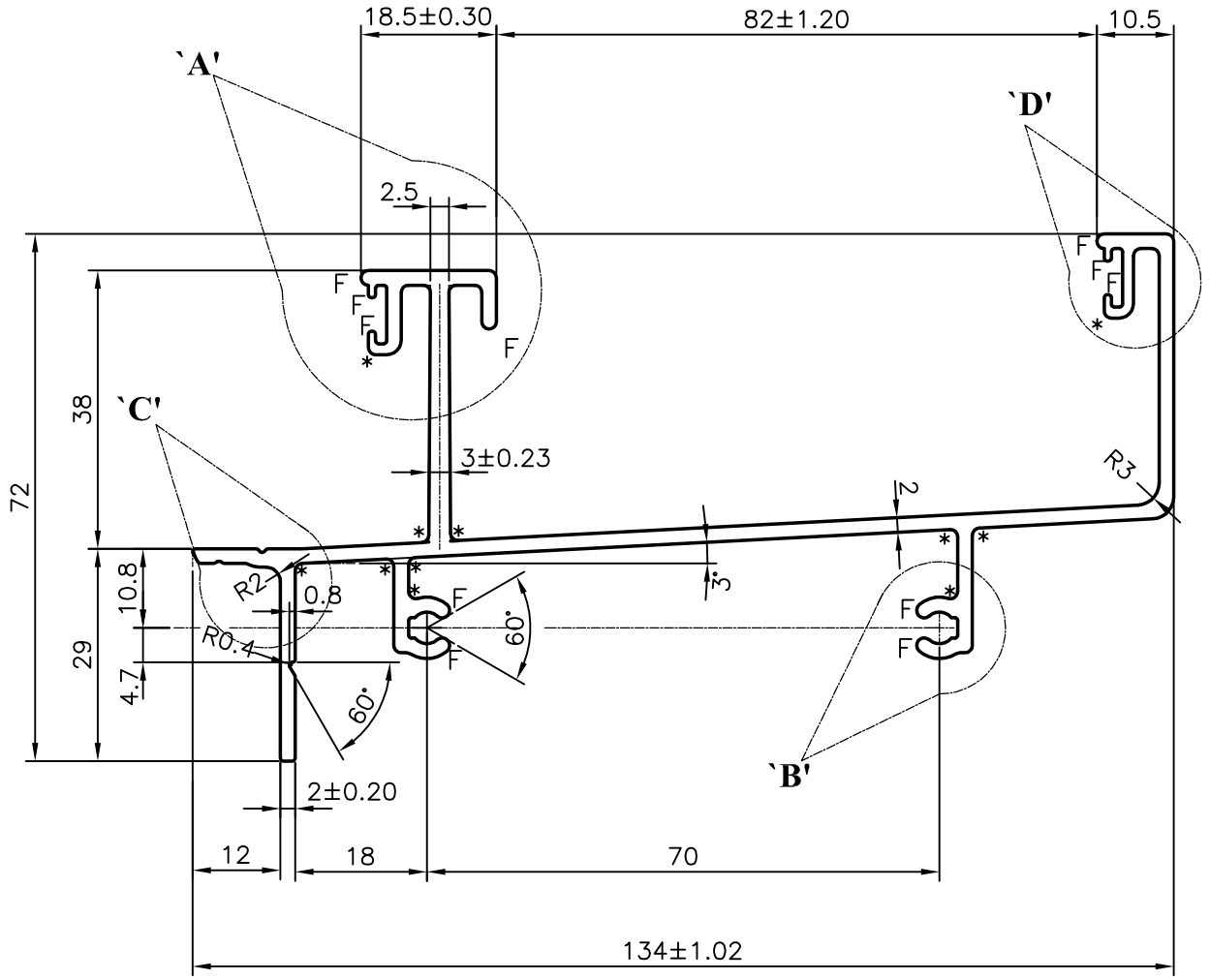

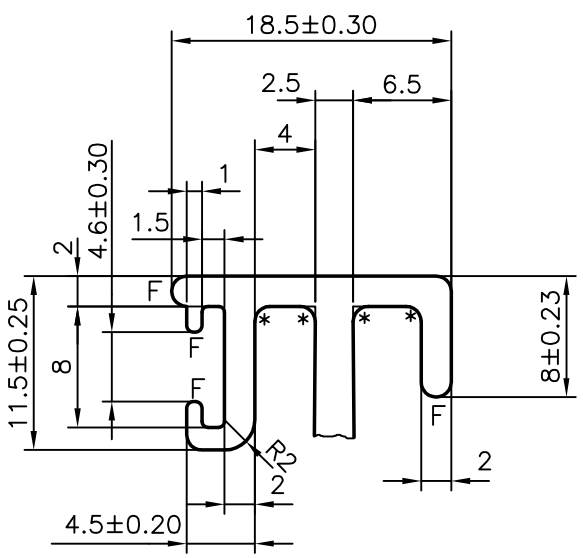

DETAIL `A'

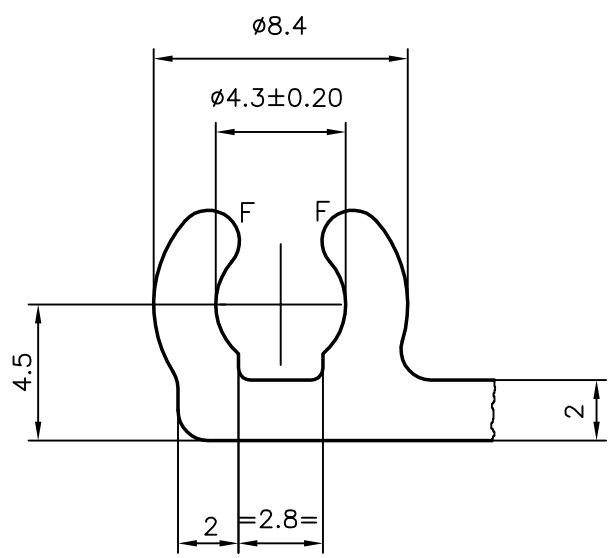

DETAIL `B'

F= FULL RADIUS (11) PLACE
*= 1.0 RADIUS (17) PLACE
GENERAL WALL THICKNESS 2.0 mm (TYP)

JINDAL SYMBOL OF QUALITY AN ISO 9001 COMPANY	*JINDAL ALUMINIUM LTD.* *BANGALORE-560073 (INDIA)*		NAME	DATE
		DRAWN	J.P.KAUSHIK	09-06-2006
		CHECKED		
		APPROVED		
1. ALL DIMENSIONS ARE IN mm. 2. ROUND OFF ALL SHARP CORNERS WITH 0.40 mm. 3. TOLERANCES WILL BE AS PER IS:3965-1981 UNLESS OTHERWISE SPECIFIED		SCALE		1:1
		AREA mm^2		713.02
		PERIMETER mm.		678.717
		WEIGHT kg/m		1.925
PARTY'S NAME	ALUPLEX INDIA PVT LTD. NAVI MUMBAI	DRAWING No.		SECTION No.
PARTY'S DRAWING No.	AS PER DRAWING	P-6450-1		–
ALLOY & TEMPER	HE9 WP	X599		X599
		29260		29260
DESCRIPTION	MISC. SECTION			