P–9002
29296

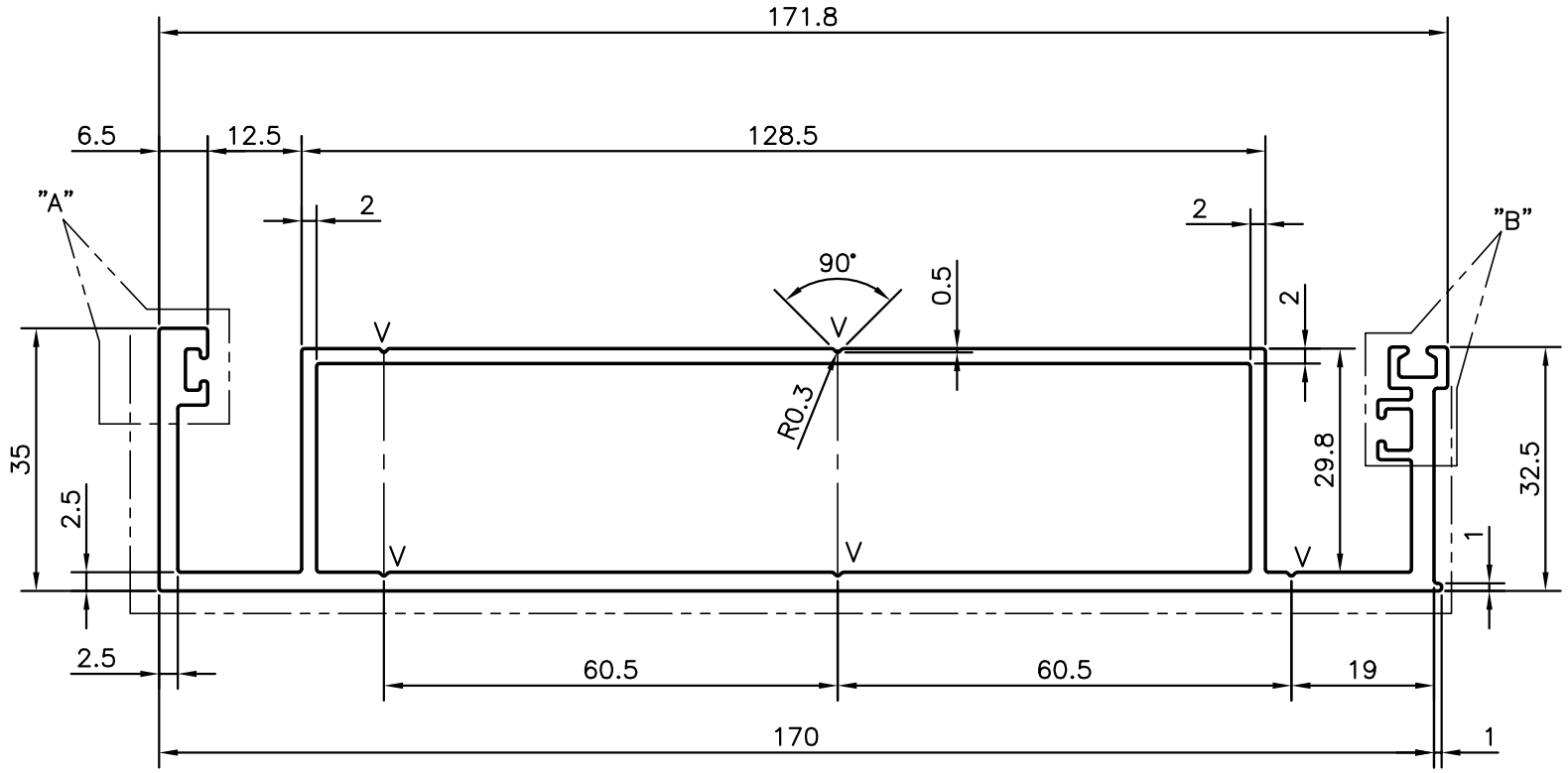

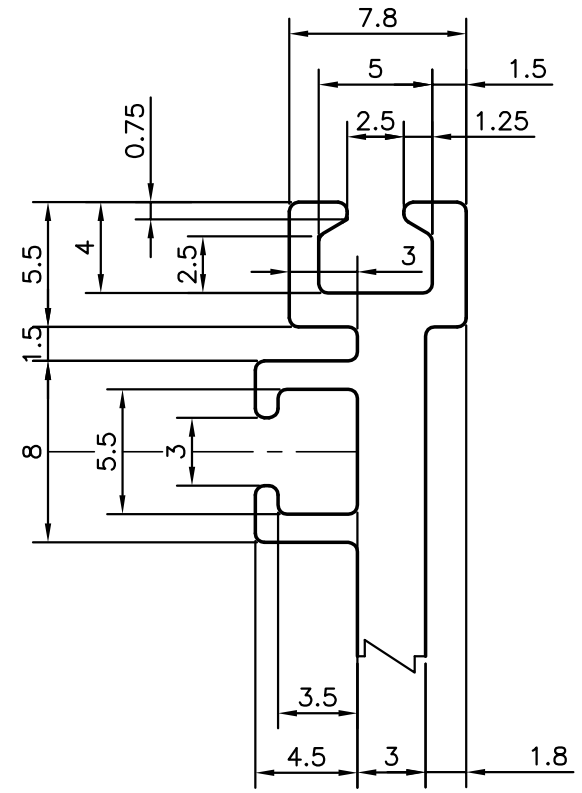

DETAIL OF "B"
SCALE 3:1

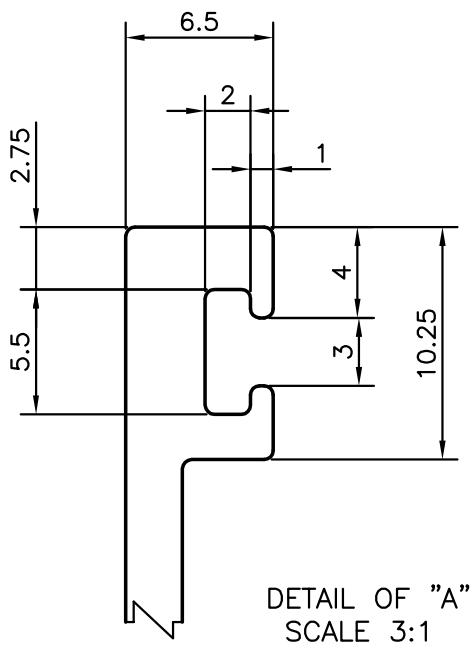

DETAIL OF "A"
SCALE 3:1

——- - -—— EXPOSED SURFACE

V = 0.25x90° 'V' GROOVE (5 PLACE)

JINDAL SYMBOL OF QUALITY AN ISO 9001 COMPANY	*JINDAL ALUMINIUM LTD.* *BANGALORE–560073 (INDIA)*		NAME	DATE
		DRAWN	J.P.KAUSHIK	31–01–2009
		CHECKED		
		APPROVED		
1. ALL DIMENSIONS ARE IN mm. 2. ROUND OFF ALL SHARP CORNERS WITH 0.40 mm. 3. TOLERANCES WILL BE AS PER IS:6477–1983 UNLESS OTHERWISE SPECIFIED		SCALE		1:1
		AREA mm^2		1013.533
		PERIMETER mm.		588.495
PARTY'S NAME	GLASS WALL SYSTEMS, MUMBAI	WEIGHT kg/m		2.737
		DRAWING No.		SECTION No.
PARTY'S DRAWING No.	AS PER DRAWING	P–9002		–
		29296		29296
ALLOY & TEMPER	HE9 WP			
DESCRIPTION	CURTAIN WALL–FEMALE SECTION			