P–9007	
29299	

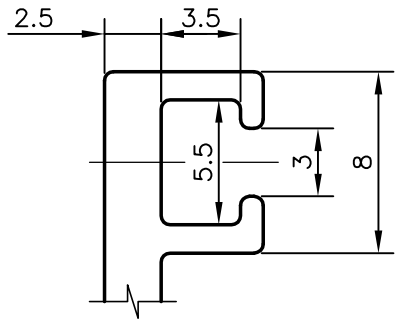

DETAIL OF "A"
SCALE 3:1

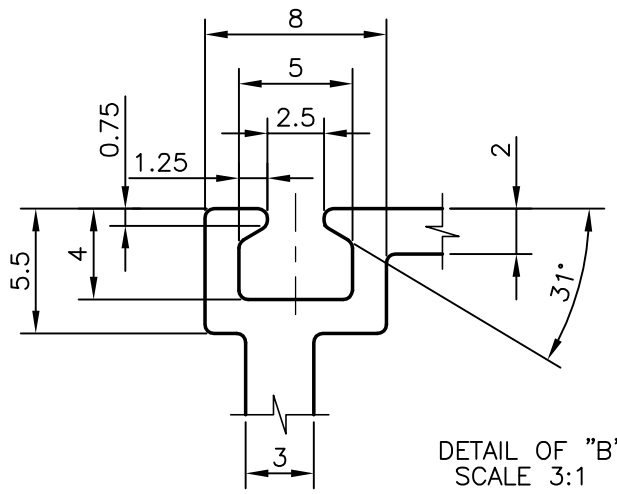

DETAIL OF "B"
SCALE 3:1

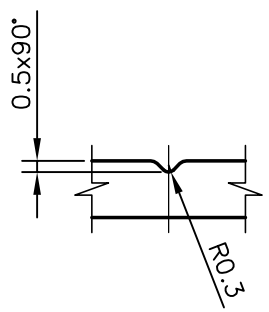

DETAIL OF "C"
SCALE 3:1

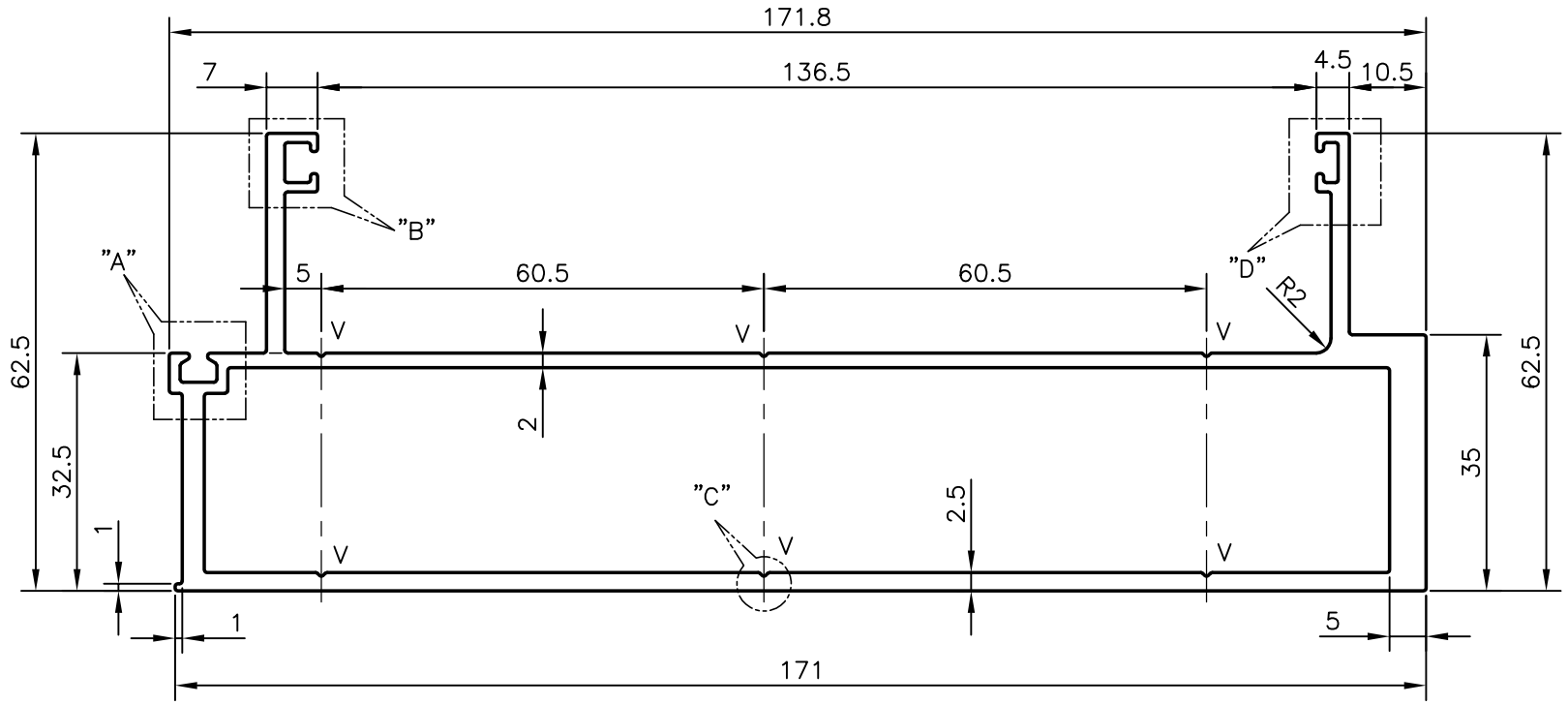

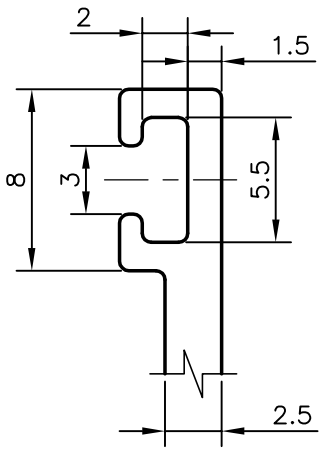

DETAIL OF "D"
SCALE 3:1

V = 0.50x90° 'V' GROOVE (6 PLACE)

			NAME	DATE
SYMBOL OF QUALITY AN ISO 9001 COMPANY	*JINDAL ALUMINIUM LTD.* *BANGALORE–560073 (INDIA)*	DRAWN	PRASANNA.H	02–02–2009
		CHECKED		
		APPROVED		
1. ALL DIMENSIONS ARE IN mm. 2. ROUND OFF ALL SHARP CORNERS WITH 0.40 mm. 3. TOLERANCES WILL BE AS PER IS:6477–1983 UNLESS OTHERWISE SPECIFIED		SCALE		1:1
		AREA mm^2		1184.48
		PERIMETER mm.		573.895
PARTY'S NAME	GLASS WALL SYSTEMS, MUMBAI	WEIGHT kg/m		3.198
		DRAWING No.		SECTION No.
PARTY'S DRAWING No.	AS PER DRAWING	P–9007		–
ALLOY & TEMPER	HE9 WP	29299		29299
DESCRIPTION	CURTAIN WALL–MALE SECTION			