| |
|---|
| P–6910–1 |
| S1929 |
| 29322 |

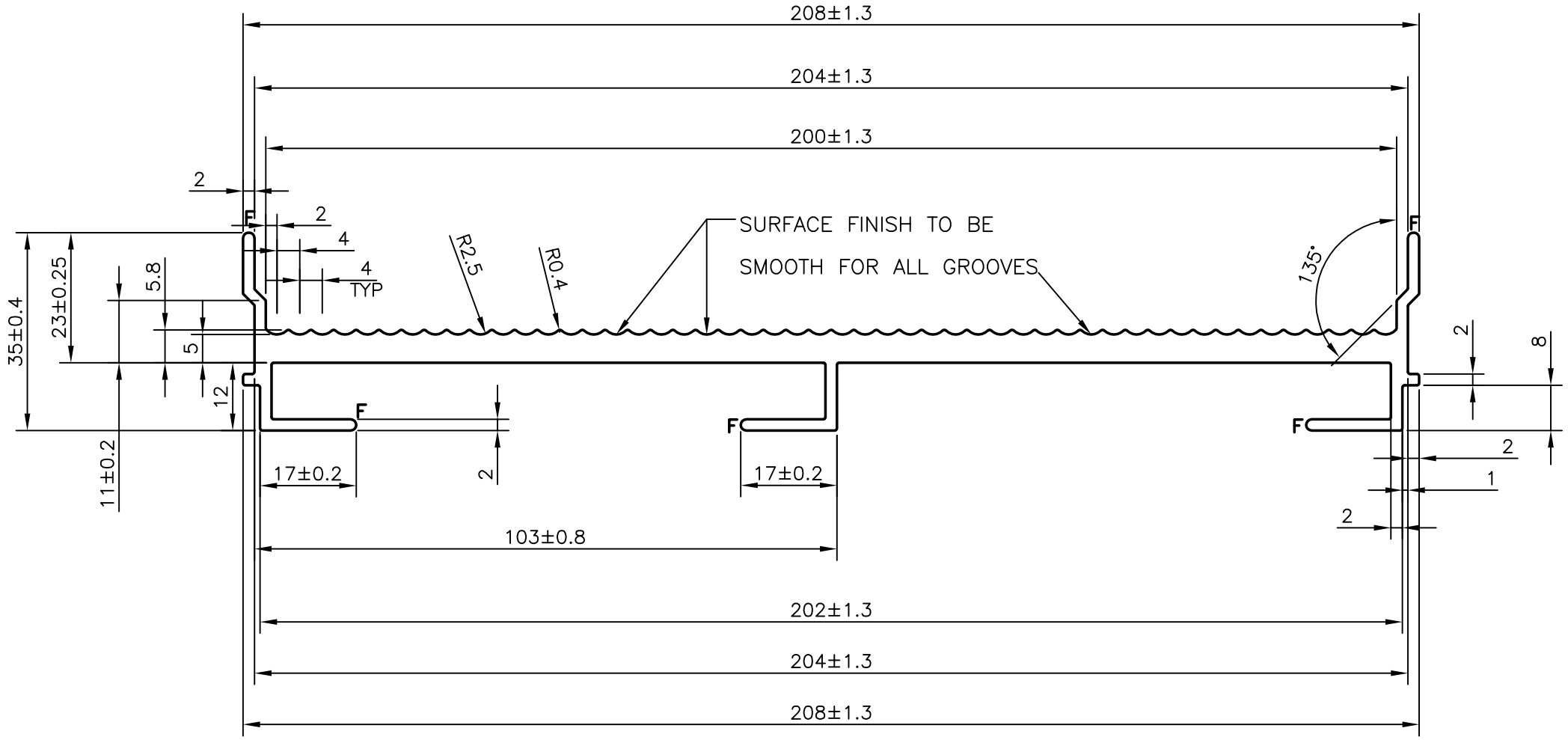


NOTE:–
1. FLATNESS TO BE MAINTAIN 1.7mm/mtr
2. FULL RADIUS IS 1mm (05 PLACES)

| | | | | |
|---|---|---|---|---|
| JINDAL<br>SYMBOL OF QUALITY<br>AN ISO 9001 COMPANY | *JINDAL ALUMINIUM LTD.*<br>*BANGALORE–560073 (INDIA)* | | NAME | DATE |
| | | DRAWN | PRASANN. H | 25–12–2006 |
| | | CHECKED | | |
| | | APPROVED | | |
| 1. ALL DIMENSIONS ARE IN mm.<br>2. ROUND OFF ALL SHARP CORNERS WITH 0.40 mm.<br>3. TOLERANCES WILL BE AS PER IS:3965–1981 UNLESS OTHERWISE SPECIFIED | | SCALE | | 1:1 |
| | | AREA $mm^2$ | | 1329.62 |
| | | PERIMETER mm. | | 674.758 |
| PARTY'S NAME | VETAL HI–TECH INDUSTRIES COMBATORE | WEIGHT kg/m | | 3.59 |
| | | DRAWING No. | | SECTION No. |
| PARTY'S DRAWING No. | 010D320101/01 | P–6910–1 | | – |
| ALLOY & TEMPER | HE9 WP | S1929 | | S1929 |
| | | 29322 | | 29322 |
| DESCRIPTION | EXTRUDE CHUTE–1 | | | |