P−9454
29356

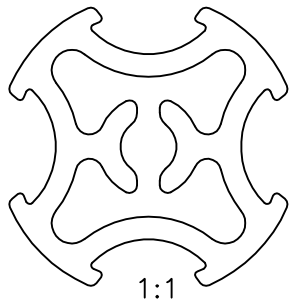

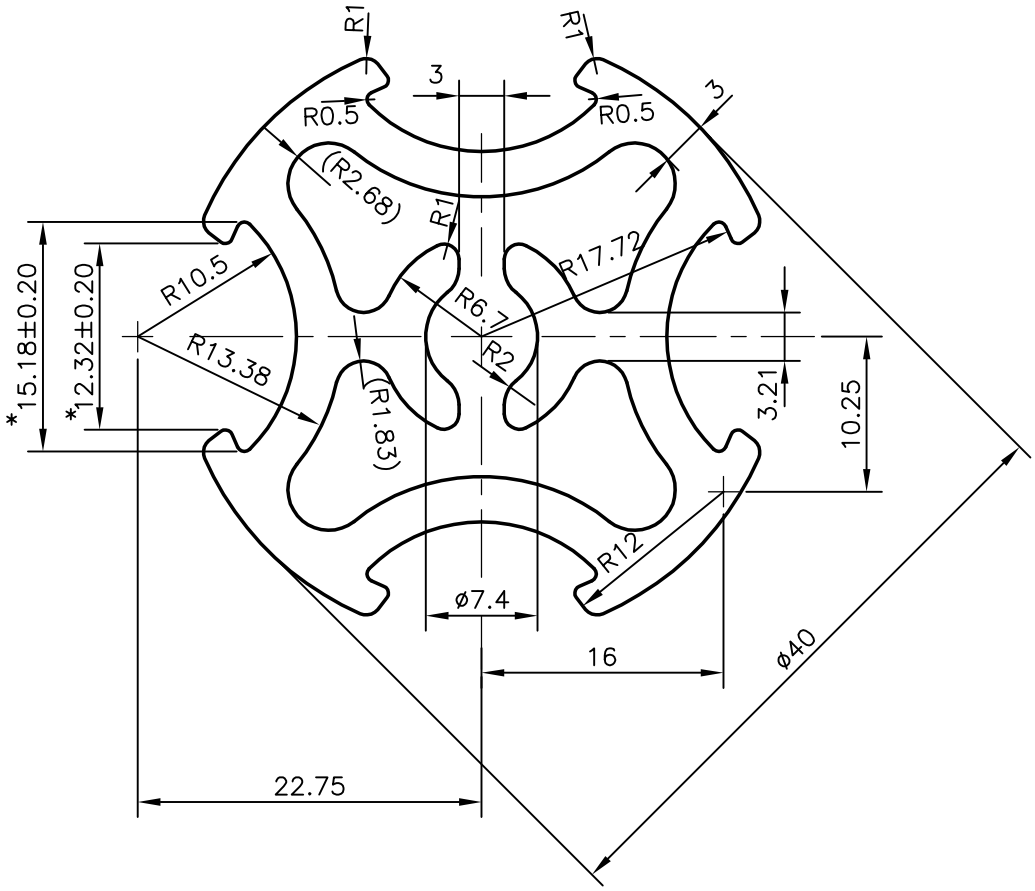

* MARKED DIMENSIONS ARE CRITICAL

			NAME	DATE
SYMBOL OF QUALITY AN ISO 9001 COMPANY	*JINDAL ALUMINIUM LTD.* *BANGALORE−560073 (INDIA)*	DRAWN	J.P.KAUSHIK	31−08−2009
		CHECKED		
		APPROVED		

1. ALL DIMENSIONS ARE IN mm.
2. ROUND OFF ALL SHARP CORNERS WITH 0.40 mm.
3. TOLERANCES WILL BE AS PER BS:EN−755 UNLESS OTHERWISE SPECIFIED

SCALE	2:1
AREA mm^2	521.557
PERIMETER mm.	166.013
WEIGHT kg/m	1.408

		DRAWING No.	SECTION No.
PARTY'S NAME	MODTEC INDUSTRIES LTD., NEW ZEALAND		
PARTY'S DRAWING No.	SA4 SIDED HOLLOW POST	P−9454	−
ALLOY & TEMPER	6106 T6	29356	29356
DESCRIPTION	MISE. SECTION		