P-9173-5
29395

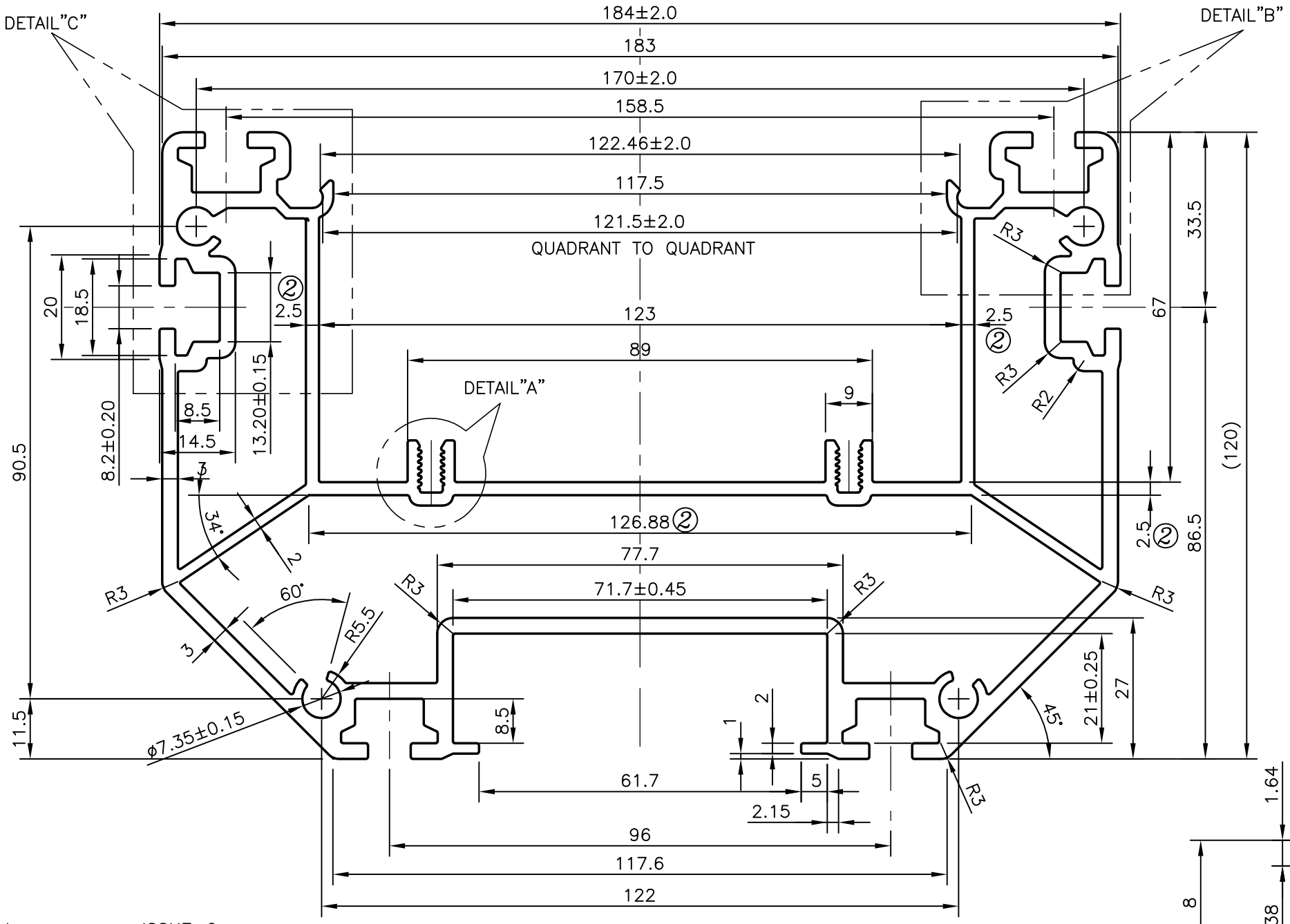

ISSUE-2

THICKNESS CHANGE FROM 2.0mm TO 2.5mm & DIMENSIONS CHANGED FROM 125.4 TO 126.88

WEIGHT ALSO CHANGED FROM 7.287 kg/M TO 7.594 kg/M

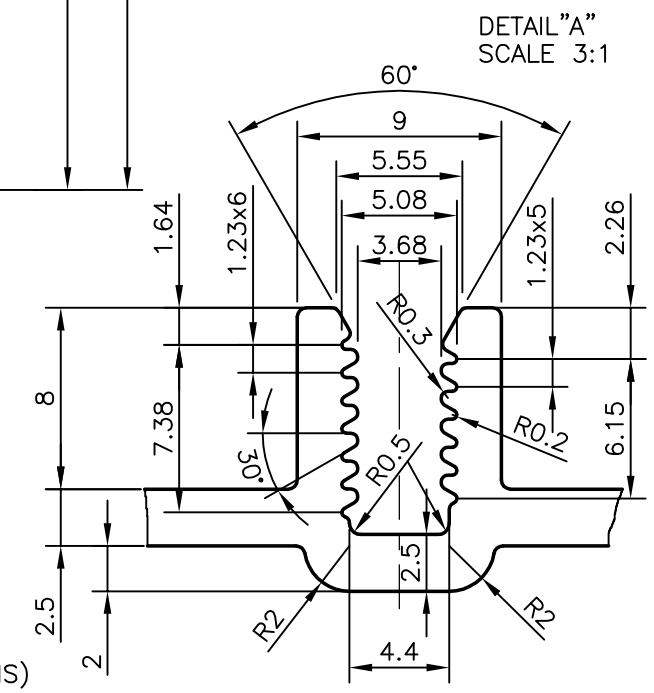

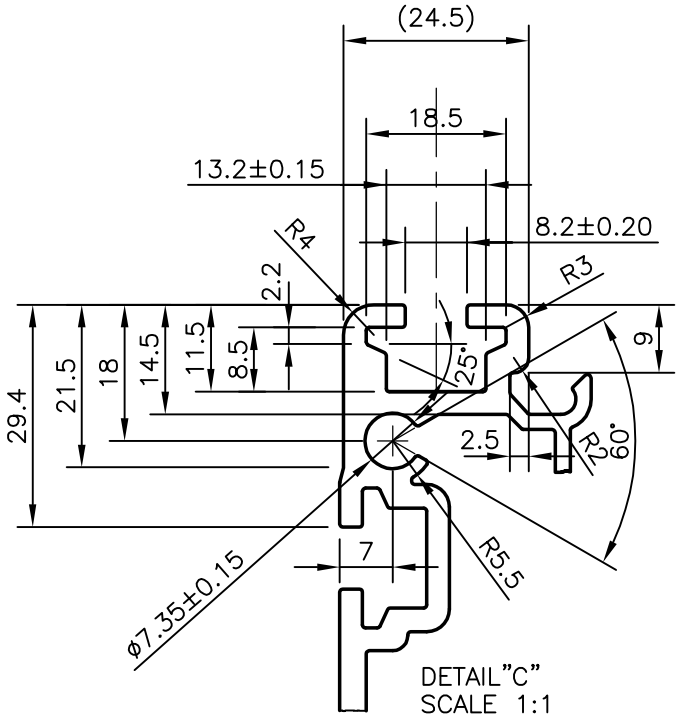

DETAIL"C"
SCALE 1:1

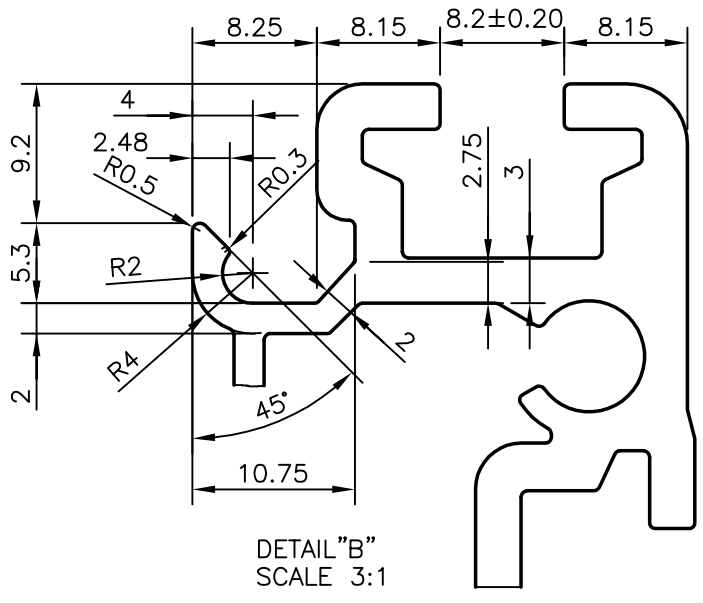

DETAIL"B"
SCALE 3:1

SURFACE TREATMENT: ANODIC TREATMENT (E6 20 MICRONS)

			NAME	DATE
JINDAL SYMBOL OF QUALITY AN ISO 9001 COMPANY	*JINDAL ALUMINIUM LTD.* *BANGALORE-560073 (INDIA)*	DRAWN	J.P.KAUSHIK	25-09-2010
		CHECKED		
		APPROVED	S.S.GARG	04-11-2010
1. ALL DIMENSIONS ARE IN mm. 2. ROUND OFF ALL SHARP CORNERS WITH 0.40 mm. 3. TOLERANCES WILL BE AS PER BS:EN-755 UNLESS OTHERWISE SPECIFIED		SCALE		1:1
		AREA mm^2		2812.737
		PERIMETER mm.		1119.659
		WEIGHT kg/m		7.594
PARTY'S NAME	KOSAN CRISPLANT LANKA PVT. LTD.,SRI LANKA	DRAWING No.		SECTION No.
PARTY'S DRAWING No.	332B935 REV.02	P-9173-5		–
ALLOY & TEMPER	AlMgSi 0.5 (EN AW 6060 TF) (6060 T6)	29395		29395(ISSUE-2)
DESCRIPTION	MISC. SECTION			