P–9595
X1224
29458

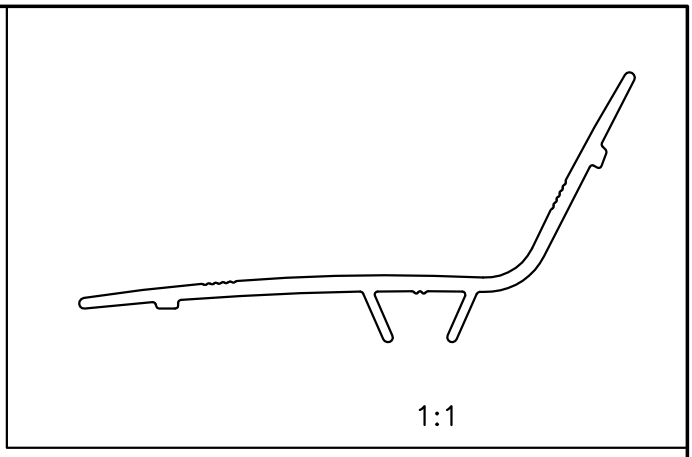

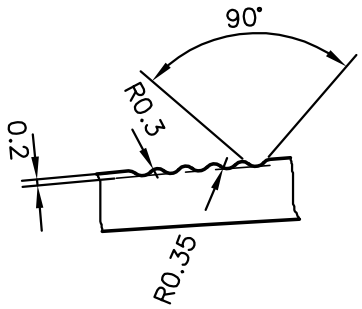

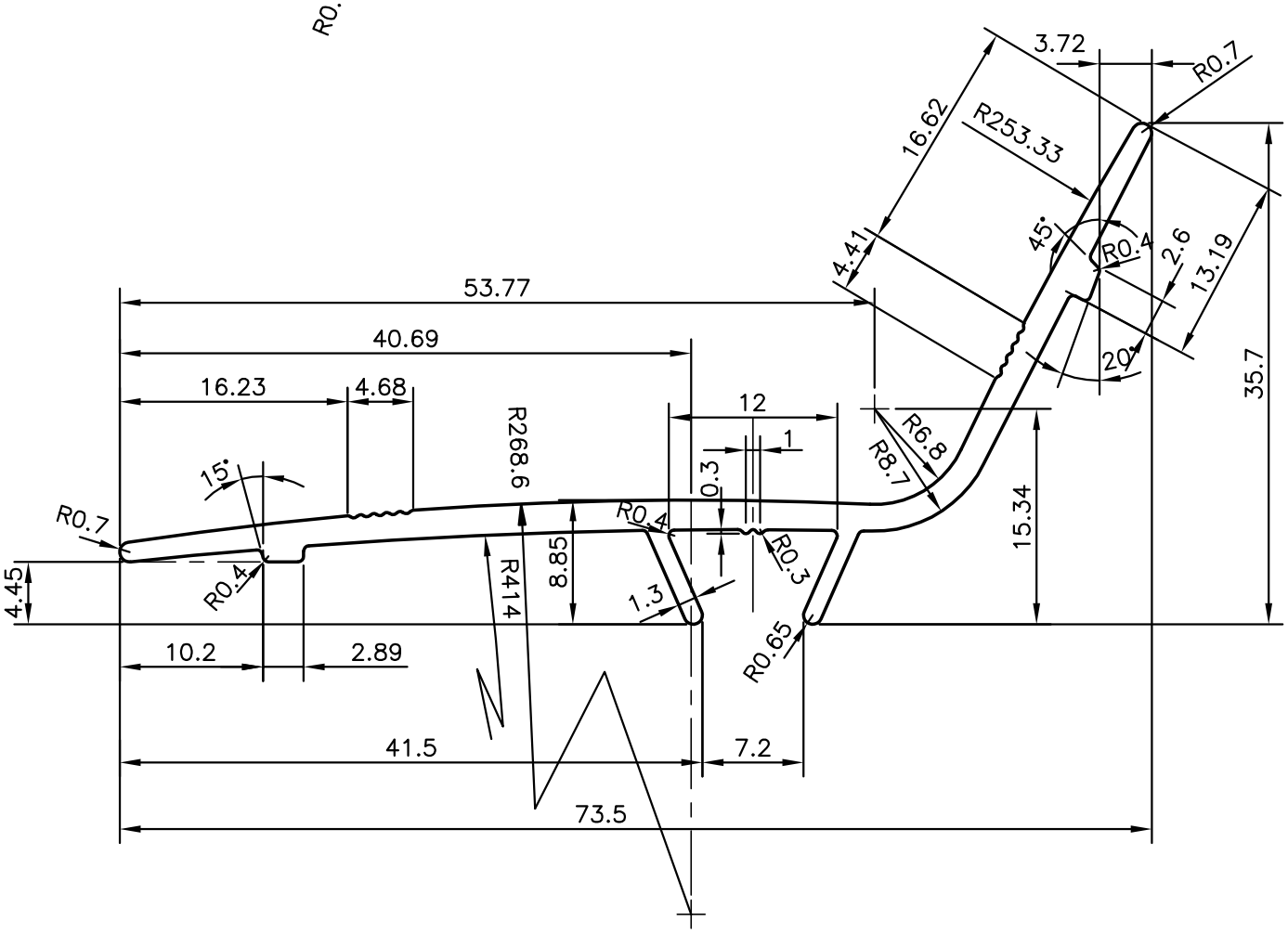

			NAME	DATE
SYMBOL OF QUALITY AN ISO 9001 COMPANY	*JINDAL ALUMINIUM LTD.* *BANGALORE–560073 (INDIA)*	DRAWN	J.P.KAUSHIK	29–10–2009
		CHECKED		
		APPROVED		

1. ALL DIMENSIONS ARE IN mm.
2. ROUND OFF ALL SHARP CORNERS WITH 0.40 mm.
3. TOLERANCES WILL BE AS PER IS:3965–1981 UNLESS OTHERWISE SPECIFIED

SCALE	2:1
AREA mm^2	195.283
PERIMETER mm.	211.345
WEIGHT kg/m	0.527

		DRAWING No.	SECTION No.
PARTY'S NAME	Z–TECH (INDIA) PVT. LTD., NEW DELHI		
PARTY'S DRAWING No.	AS PER SAMPLE	P–9595	–
ALLOY & TEMPER	HE9 WP	X1224	X1224
DESCRIPTION	MISC. SECTION	29458	29458