P−10058
X1299
29490

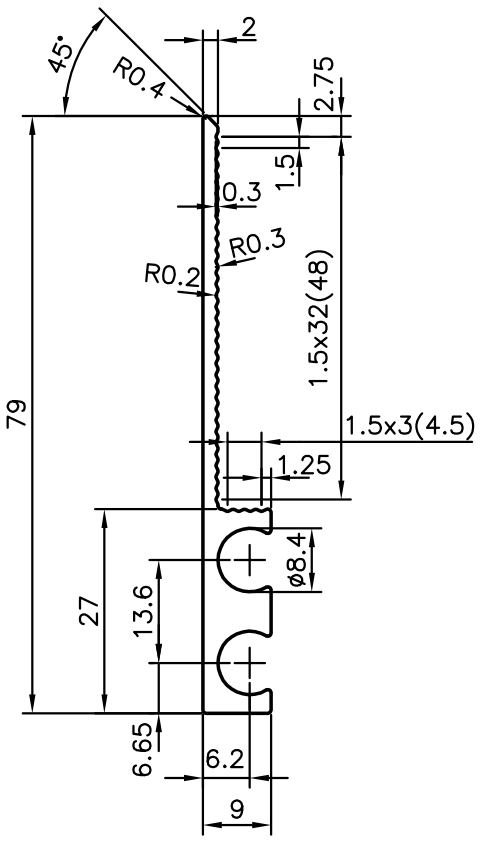

JINDAL SYMBOL OF QUALITY AN ISO 9001 COMPANY	*JINDAL ALUMINIUM LTD.* *BANGALORE−560073 (INDIA)*		NAME	DATE
		DRAWN	J.P.KAUSHIK	21−05−2010
		CHECKED		
		APPROVED	S.S.GARG	01−06−2010
1. ALL DIMENSIONS ARE IN mm. 2. ROUND OFF ALL SHARP CORNERS WITH 0.40 mm. 3. TOLERANCES WILL BE AS PER IS:3965−1981 UNLESS OTHERWISE SPECIFIED		SCALE		1:1
		AREA mm^2		238.551
		PERIMETER mm.		202.262
		WEIGHT kg/m		0.644
PARTY'S NAME	V.G. SALES, NEW DELHI	DRAWING No.		SECTION No.
PARTY'S DRAWING No.	AS PER DRAWING (7B)	P−10058		−
ALLOY & TEMPER	6060 T6	X1299		X1299
		29490		29490
DESCRIPTION	MISC. SECTION			