P−10444−1
S2749
29506

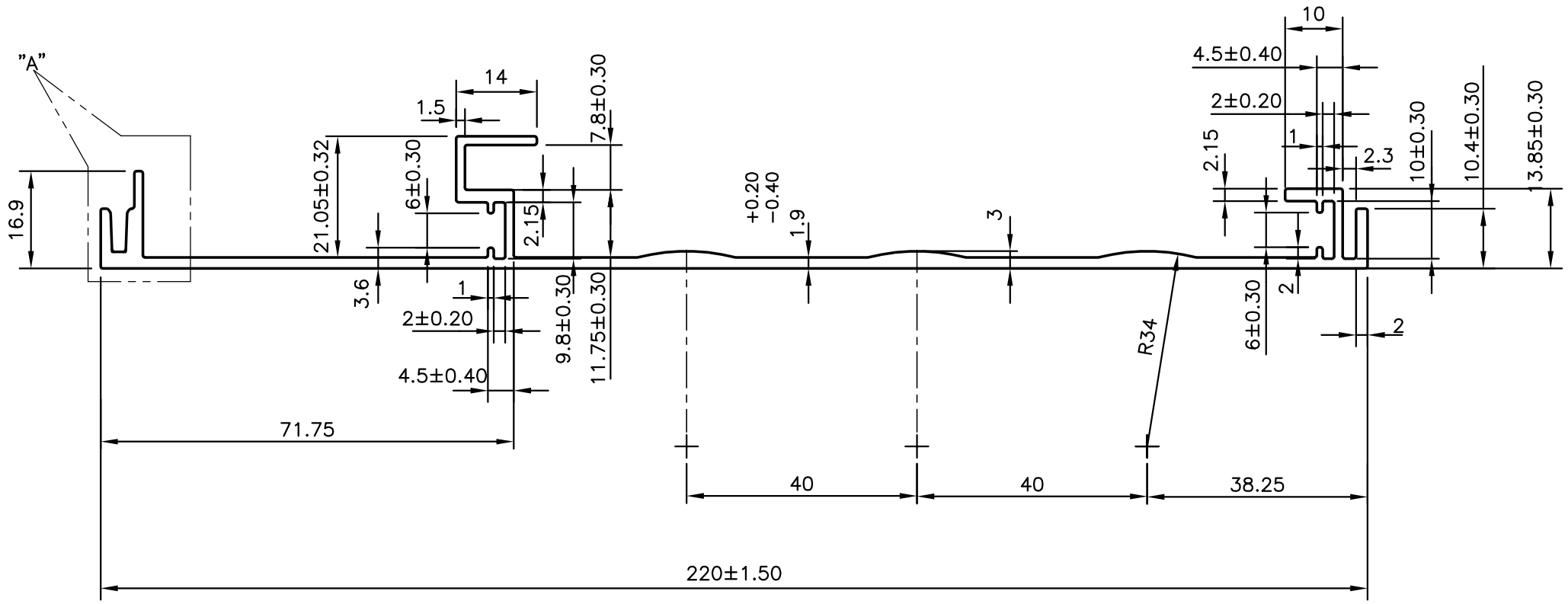

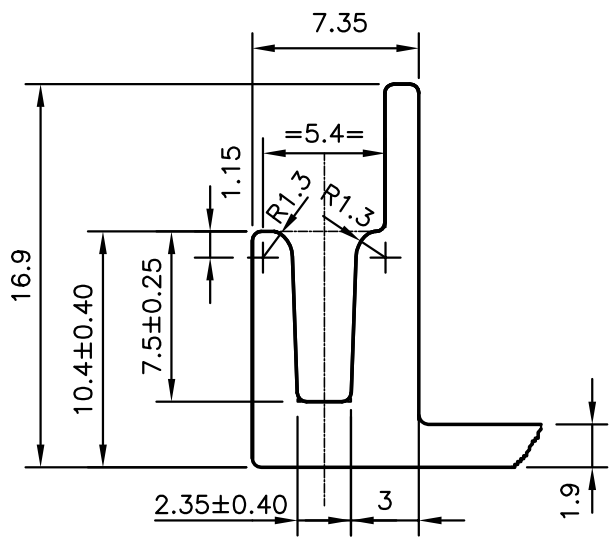

DETAIL OF "A"
SCALE 3:1

JINDAL SYMBOL OF QUALITY AN ISO 9001 COMPANY	*JINDAL ALUMINIUM LTD.* *BANGALORE−560073 (INDIA)*		NAME	DATE
		DRAWN	J.P.KAUSHIK	07−10−2010
		CHECKED		
		APPROVED	S.S.GARG	04−11−2010
1. ALL DIMENSIONS ARE IN mm. 2. ROUND OFF ALL SHARP CORNERS WITH 0.40 mm. 3. TOLERANCES WILL BE AS PER IS:3965−1981 UNLESS OTHERWISE SPECIFIED		SCALE		1:1
		AREA mm^2		635.934
		PERIMETER mm.		638.515
		WEIGHT kg/m		1.717
PARTY'S NAME	AAF INDIA PVT. LTD., BANGALORE	DRAWING No.		SECTION No.
PARTY'S DRAWING No.	AAF−R&D−EXT 037	P−10444−1		−
ALLOY & TEMPER	6063 T6	S2749		S2749
		29506		29506
DESCRIPTION	MISC. SECTION			