P-10914-1
X1502
29530

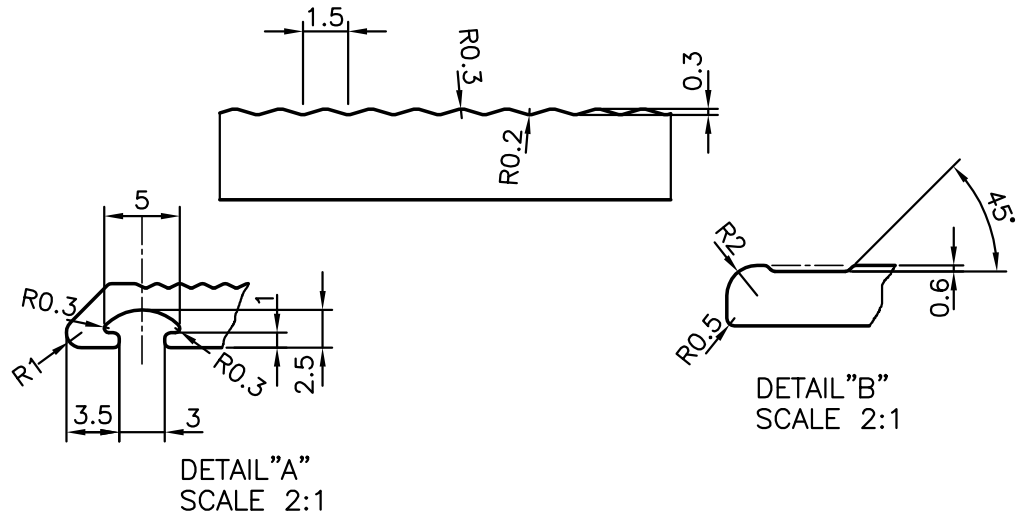

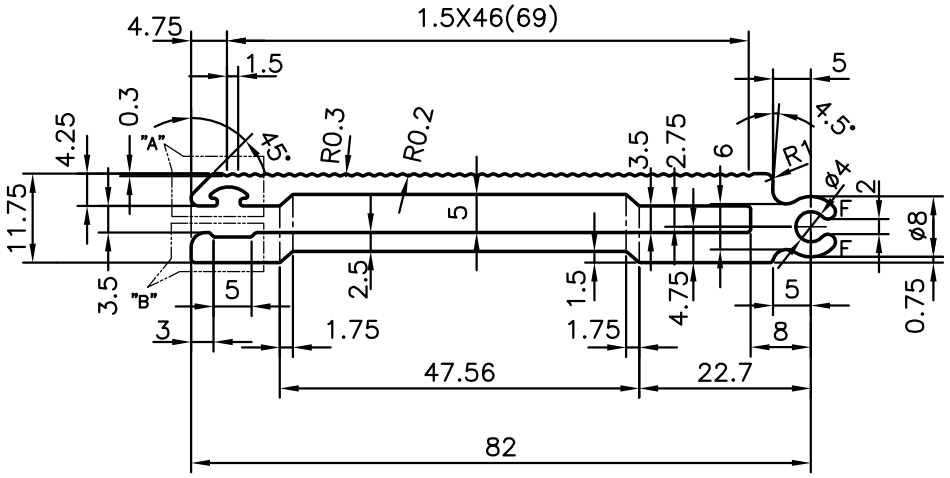

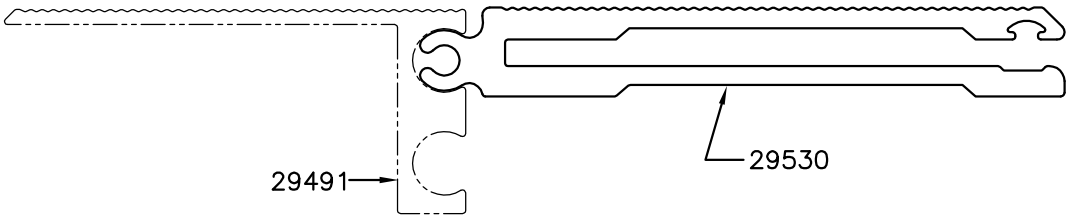

F = FULL RADIUS (2 PLACES)

JINDAL SYMBOL OF QUALITY AN ISO 9001 COMPANY	*JINDAL ALUMINIUM LTD.* *BANGALORE-560073 (INDIA)*		NAME	DATE
		DRAWN	J.P.KAUSHIK	12-05-2011
		CHECKED		
		APPROVED	S.S.GARG	21-05-2011
1. ALL DIMENSIONS ARE IN mm. 2. ROUND OFF ALL SHARP CORNERS WITH 0.40 mm. 3. TOLERANCES WILL BE AS PER IS:3965-1981 UNLESS OTHERWISE SPECIFIED		SCALE		1:1
		AREA mm^2		522.179
		PERIMETER mm.		362.025
PARTY'S NAME	V.G. SALES, NEW DELHI	WEIGHT kg/m		1.410
		DRAWING No.		SECTION No.
PARTY'S DRAWING No.	AS PER DRAWING (7C) (MODIFIED)	P-10914-1		-
ALLOY & TEMPER	HE9 WP	X1502		X1502
		29530		29530
DESCRIPTION	MISC. SECTION			