| |
|---|
| P–13969 |
| S4229 |
| 29566 |

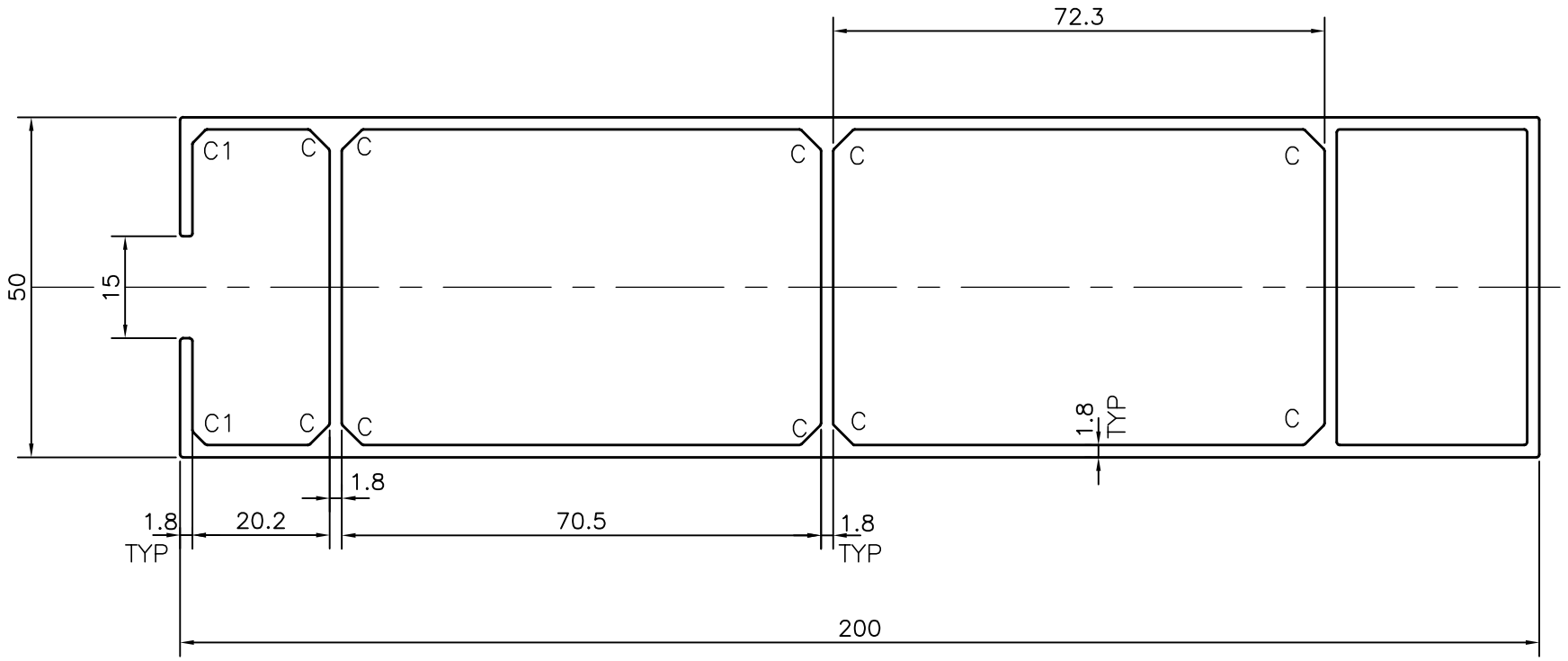


C1 =CHAMFER 2x45° (2 PLACES)
C =CHAMFER 3x45° (10 PLACES)

| | | | | |
|---|---|---|---|---|
| JINDAL<br>SYMBOL OF QUALITY<br>AN ISO 9001 COMPANY | *JINDAL ALUMINIUM LTD.*<br>*BANGALORE–560073 (INDIA)* | | NAME | DATE |
| | | DRAWN | J.P.KAUSHIK | 06–09–2014 |
| | | CHECKED | | |
| | | APPROVED | S.S.GARG | 10–09–2014 |
| 1. ALL DIMENSIONS ARE IN mm.<br>2. ROUND OFF ALL SHARP CORNERS WITH 0.40 mm.<br>3. TOLERANCES WILL BE AS PER IS:6477–1983 , UNLESS OTHERWISE SPECIFIED | | SCALE | | 1:1 |
| | | AREA $mm^2$ | | 1159.538 |
| | | PERIMETER mm. | | 599.431 |
| | | WEIGHT kg/m | | 3.131 |
| PARTY'S NAME | DURLUM INDIA PVT.LTD., GURGAON | DRAWING No. | | SECTION No. |
| PARTY'S DRAWING No. | AS PER AutoCAD DRAWING | P–13969 | | – |
| | | S4229 | | S4229 |
| ALLOY & TEMPER | 6063 T6 | 29566 | | 29566 |
| DESCRIPTION | BAFFEL SECTION | | | |