P-15085-1
S4629
29665

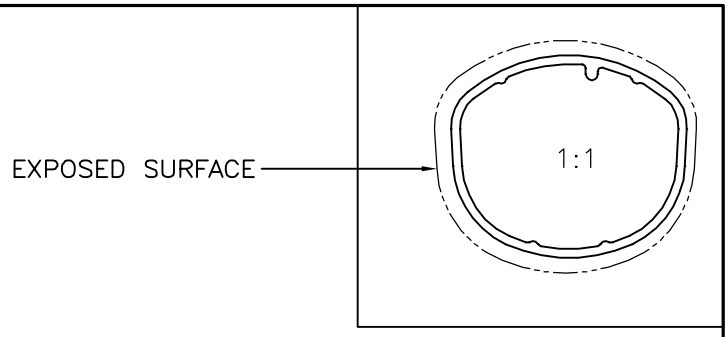

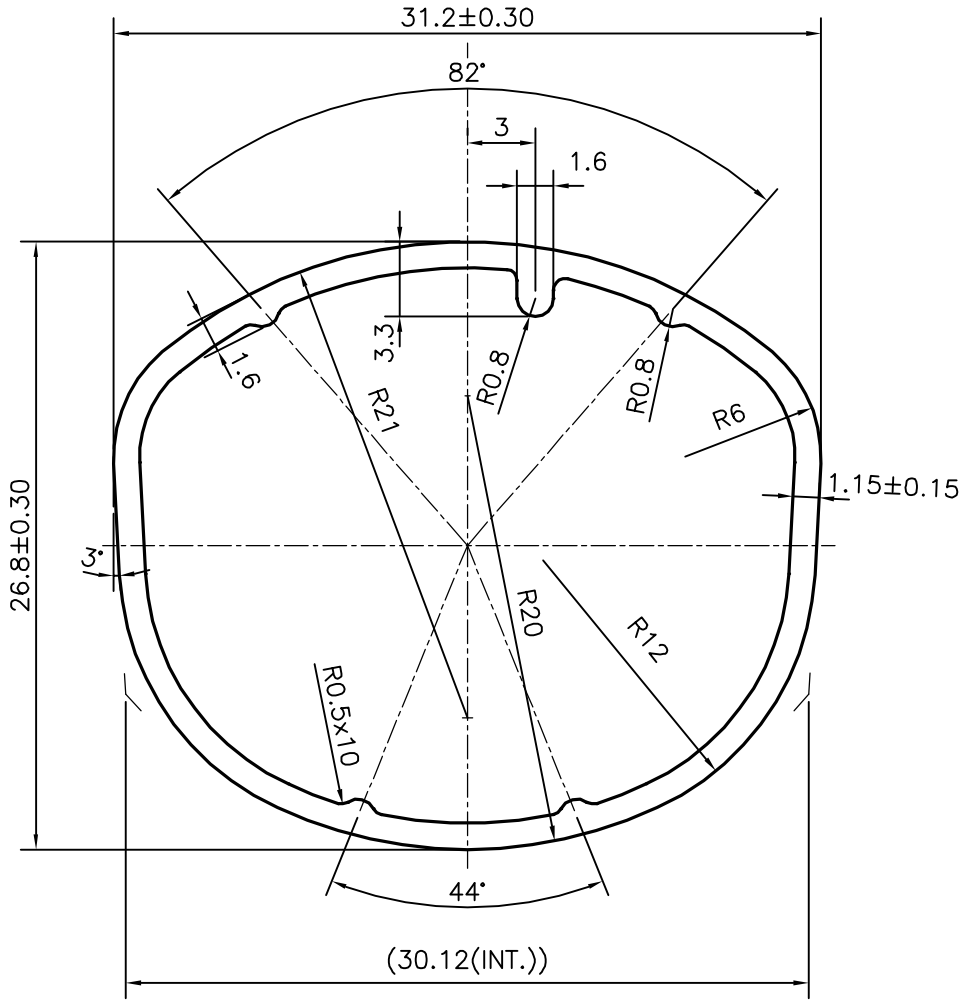

			NAME	DATE
JINDAL SYMBOL OF QUALITY AN ISO 9001 COMPANY	*JINDAL ALUMINIUM LTD.* *BANGALORE-560073 (INDIA)*	DRAWN	*J.P.KAUSHIK*	29-08-2015
		CHECKED		
		APPROVED	S.S.GARG	04-09-2015

1. ALL DIMENSIONS ARE IN mm.
2. ROUND OFF ALL SHARP CORNERS WITH 0.40 mm.
3. TOLERANCES WILL BE AS PER IS:6477-1983 , UNLESS OTHERWISE SPECIFIED

SCALE	3:1
AREA mm^2	108.192
PERIMETER mm.	93.492
WEIGHT kg/m	0.292

		DRAWING No.	SECTION No.
PARTY'S NAME	STOVEKRAFT PVT. LTD., BANGALORE		
PARTY'S DRAWING No.	NG EXT 000 02	P-15085-1	–
ALLOY & TEMPER	6063 T6	S4629	S4629
DESCRIPTION	FLAME GUARD SECTION	29665	29665