P–21710
29715

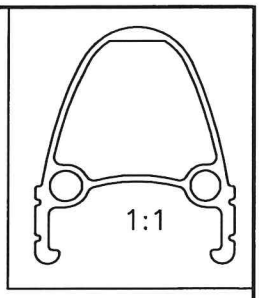

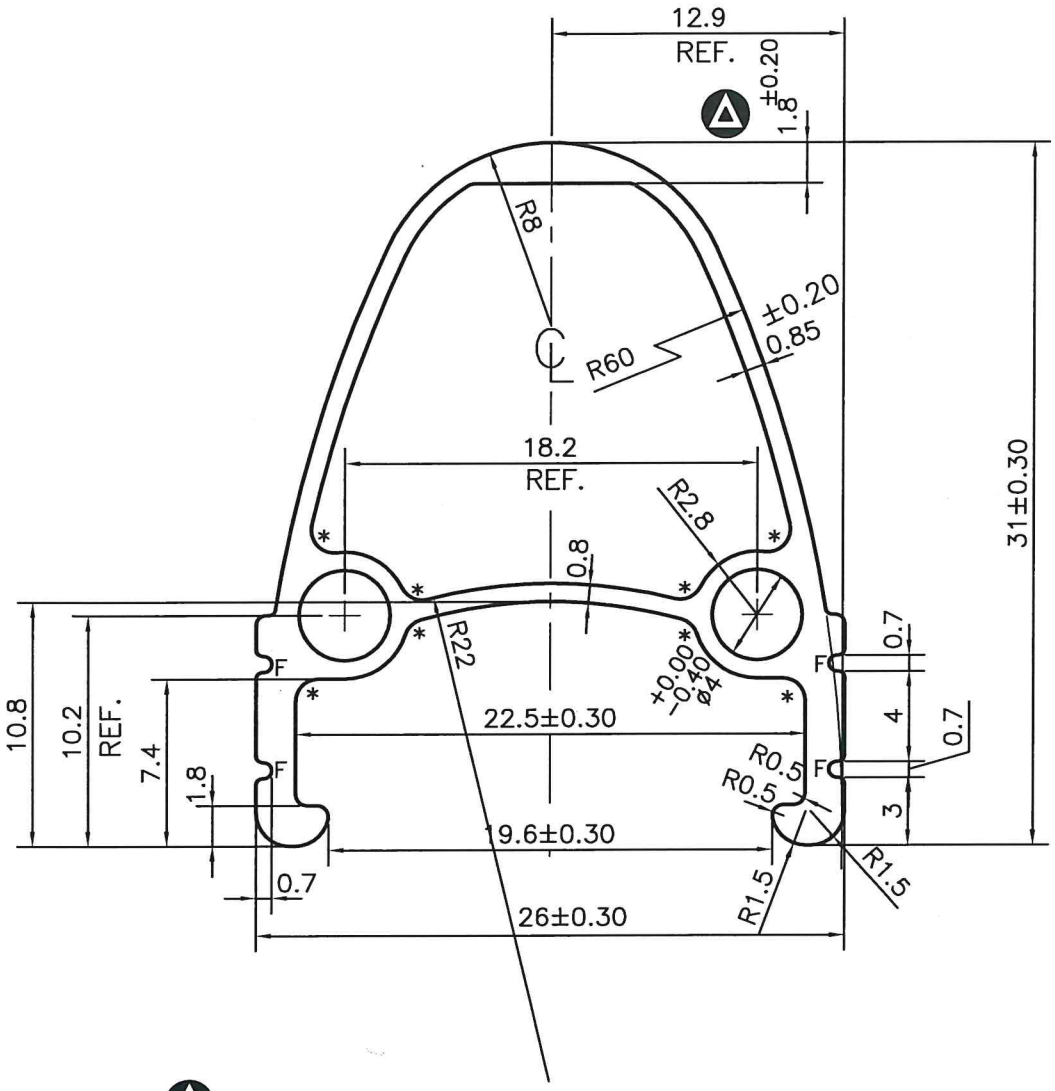

ISSUE–2 △

THICCKNESS CHANGED FROM 1.5 mm TO 1.8mm & TOLERANCE ADDED ±0.20

WEIGHT ALSO CHANGED FROM 0.316 kg/m TO 0.322 kg/m

F = FULL RADIUS (4 PLACES)

* = 1.0 RADIUS (8 PLACES)

APPROXIMATE WEIGHT RANGE –0.290 – 0.354 kg/m

			NAME	DATE
JINDAL SYMBOL OF QUALITY AN ISO 9001 COMPANY	*JINDAL ALUMINIUM LTD.* *BANGALORE–560073 (INDIA)*	DRAWN	J.P.KAUSHIK	07–08–2021
		CHECKED		20/08/21
		APPROVED		20/8/21

1. ALL DIMENSIONS ARE IN mm.
2. ROUND OFF ALL SHARP CORNERS WITH 0.40 mm.
3. TOLERANCES WILL BE AS PER IS:6477–1983 UNLESS OTHERWISE SPECIFIED

SCALE	3:1
AREA mm^2	119.173
PERIMETER mm.	121.807
WEIGHT kg/m	0.322

		DRAWING No.	SECTION No.
PARTY'S NAME	UNITED MARATHON ENGINEERS PVT. LTD., LUDHIANA		
PARTY'S DRAWING No.	11 18 19 175	P–21710	–
		29715	29715(ISSUE–2)
ALLOY & TEMPER	6063 T6		
DESCRIPTION	RIM SECTION		