P–10799
S2938
33507

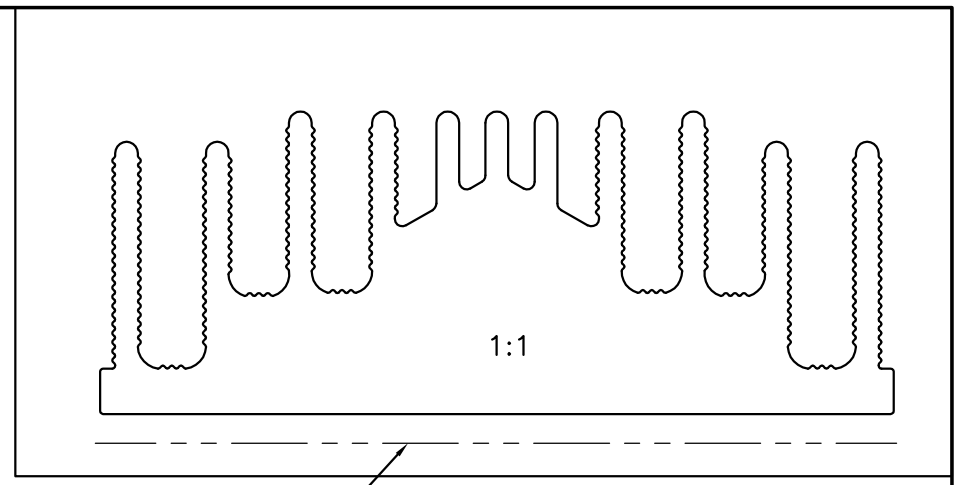

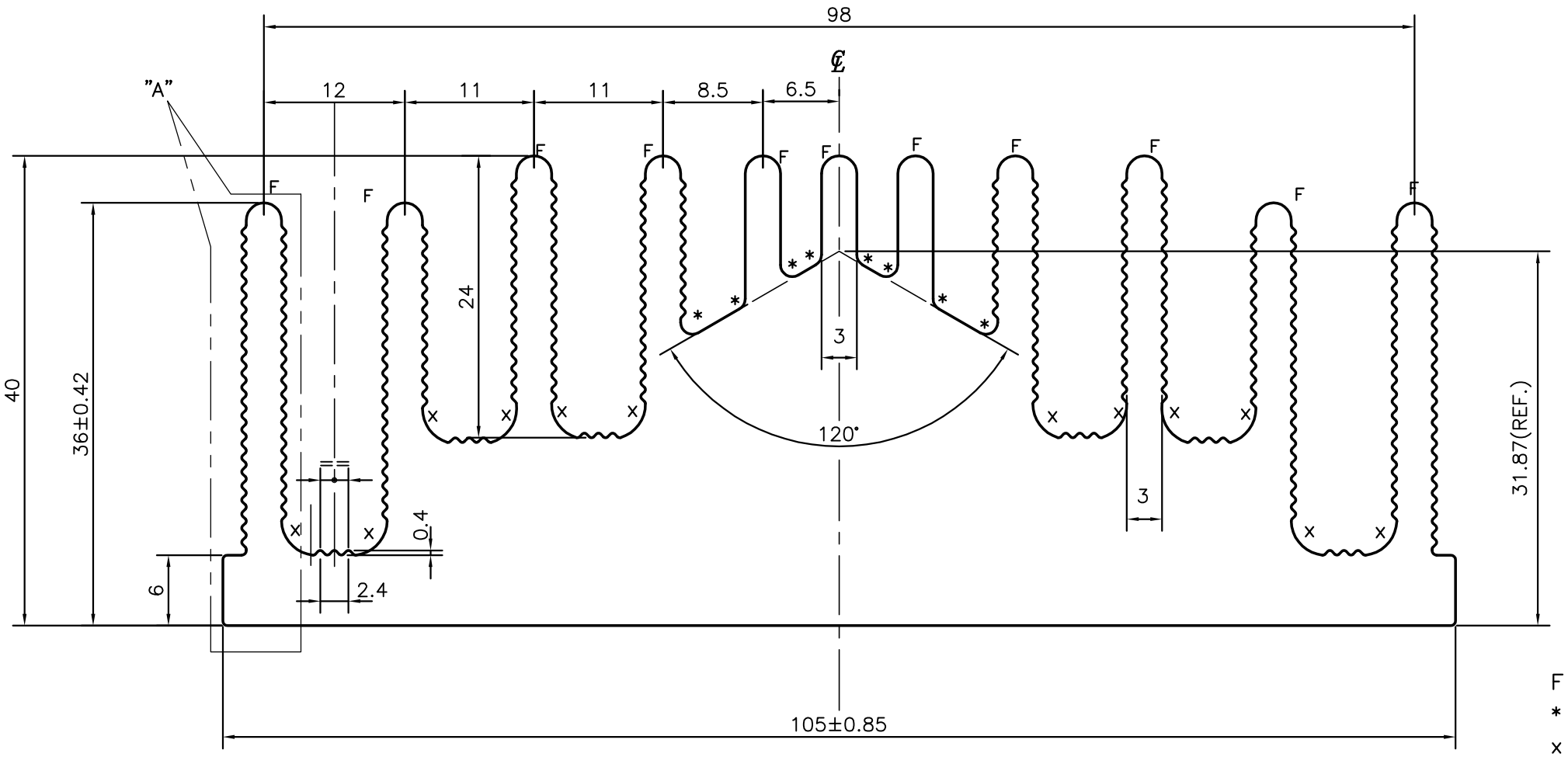

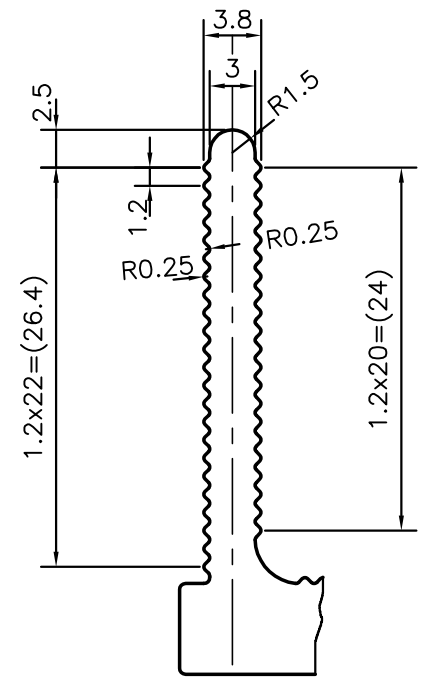

DETAIL OF "A"
SCALE 2:1

F = FULL RADIUS (11)
* = 1.0 RADIUS (8)
x = 3.0 RADIUS (16)

JINDAL
SYMBOL OF QUALITY
AN ISO 9001 COMPANY

JINDAL ALUMINIUM LTD.
BANGALORE–560073 (INDIA)

1. ALL DIMENSIONS ARE IN mm.
2. ROUND OFF ALL SHARP CORNERS WITH 0.40 mm.
3. TOLERANCES WILL BE AS PER IS:3965–1981 UNLESS OTHERWISE SPECIFIED

PARTY'S NAME	KERALA ELECTRICAL & ALLIED, KERALA
PARTY'S DRAWING No.	AS PER DRAWING
ALLOY & TEMPER	E91E WP
DESCRIPTION	HEATSINK SECTION

	NAME	DATE
DRAWN	J.P.KAUSHIK	26–02–2011
CHECKED		
APPROVED	S.S.GARG	25–05–2011
SCALE		2:1
AREA mm^2		2484.22
PERIMETER mm.		737.024
WEIGHT kg/m		6.707

DRAWING No.	SECTION No.
P–10799	–
S2938	S2938
33507	33507