P–11543
S3180
33528

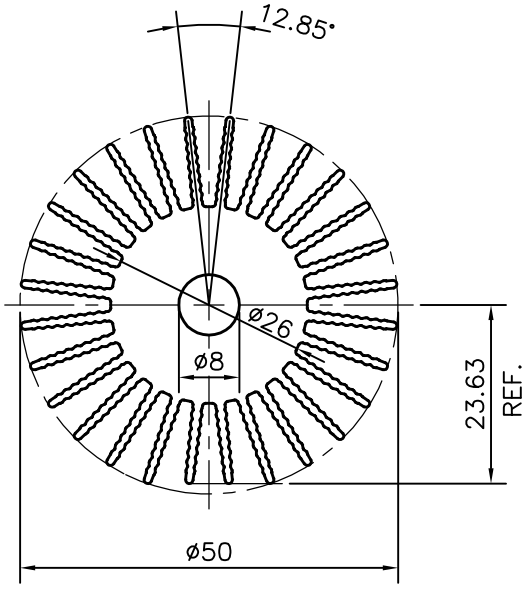

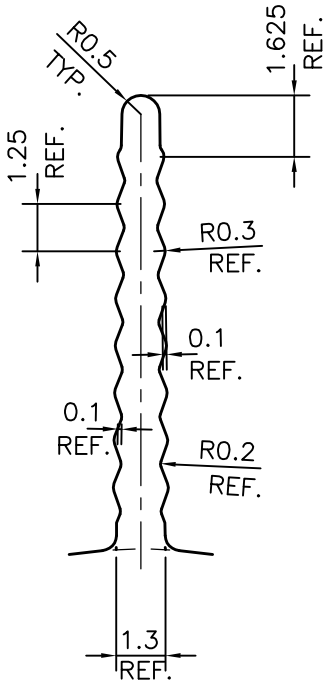

FIN DETAIL

SCALE 5:1

JINDAL SYMBOL OF QUALITY AN ISO 9001 COMPANY	***JINDAL ALUMINIUM LTD.*** *BANGALORE–560073 (INDIA)*		NAME	DATE
		DRAWN	*PARVESH*	03–02–2012
		CHECKED		
		APPROVED	J.N. RAI	08–02–2012
1. ALL DIMENSIONS ARE IN mm. 2. ROUND OFF ALL SHARP CORNERS WITH 0.40 mm. 3. TOLERANCES WILL BE AS PER IS:6477–1983, UNLESS OTHERWISE SPECIFIED		SCALE		1:1
		AREA mm^2		861.927
		PERIMETER mm.		752.051
		WEIGHT kg/m		2.327
PARTY'S NAME	REIZ ELECTROCONTROLS, GURGAON	DRAWING No.		SECTION No.
PARTY'S DRAWING No.	AS PER DRAWING	P–11543		
ALLOY & TEMPER	6063 T6	S3180		S3180
		33528		33528
DESCRIPTION	HEAT SINK–ROUND			