P-17422-1

33605

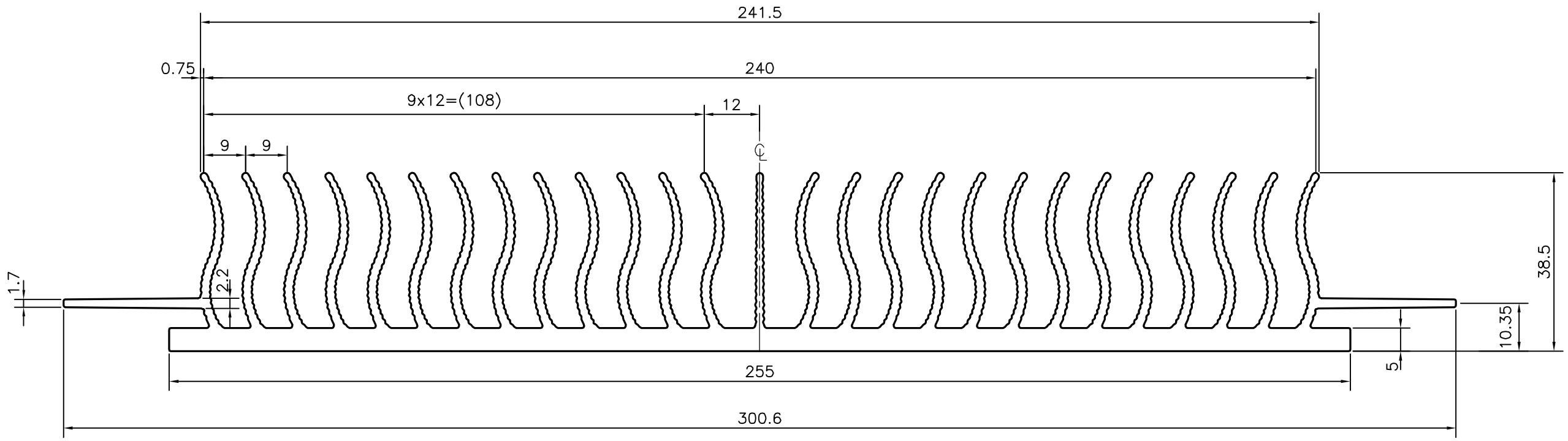

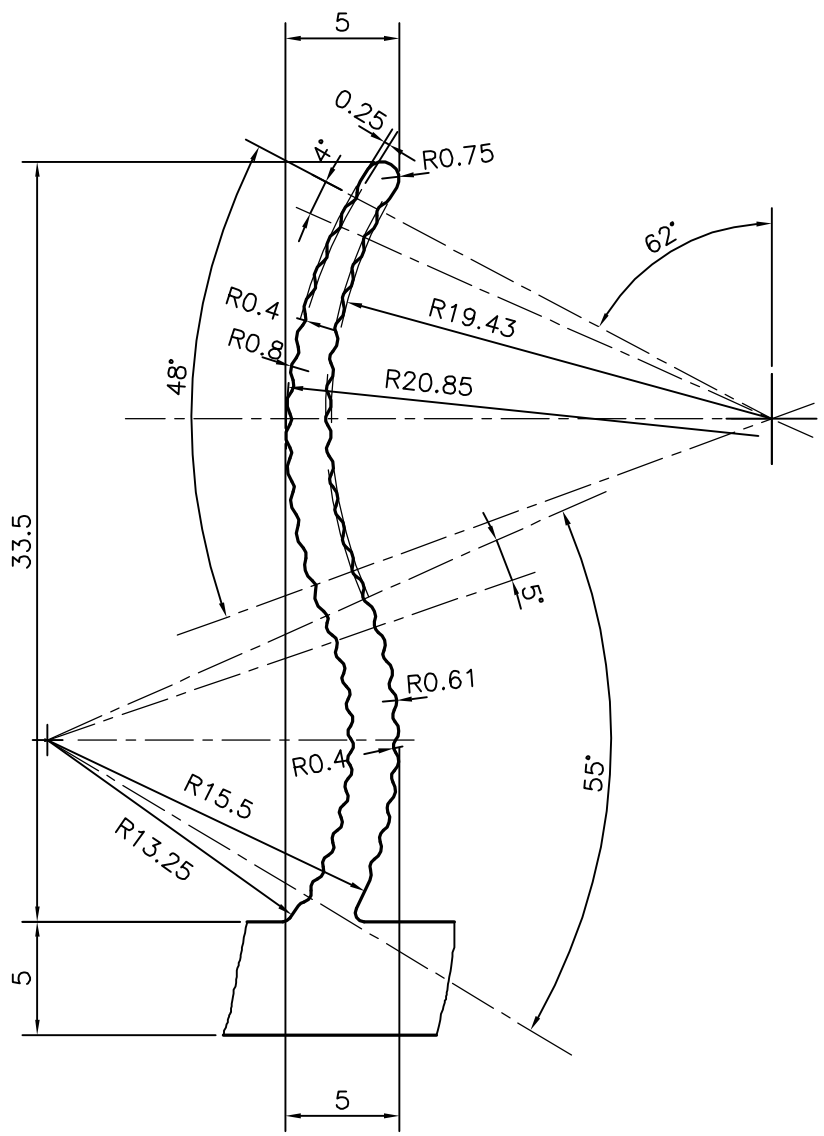

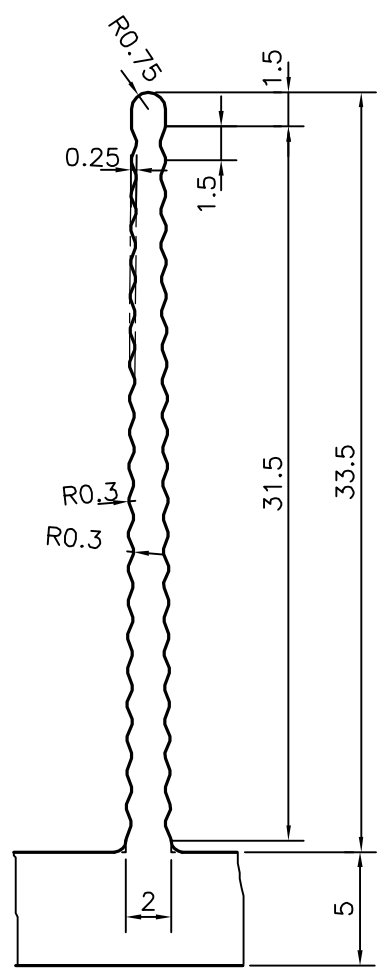

TOLERANCES ON OVERALL WIDTHS & WIDTHS ACROSS FLATS OF BARS, & REGULAR SECTIONS			
UPTO 6.40mm – ±0.20 UPTO 10.0mm – ±0.23 UPTO 12.0mm – ±0.25 UPTO 16.0mm – ±0.28 UPTO 25.0mm – ±0.30	UPTO 32.0mm – ±0.38 UPTO 50.0mm – ±0.46 UPTO 60.0mm – ±0.53 UPTO 80.0mm – ±0.69 UPTO 100.0mm – ±0.75	UPTO 120.0mm – ±0.85 UPTO 160.0mm – ±1.02 UPTO 200.0mm – ±1.14 UPTO 250.0mm – ±1.40 UPTO 300.0mm – ±1.65	UPTO 320.00mm – ±1.70

JINDAL

SYMBOL OF QUALITY
AN ISO 9001 COMPANY

JINDAL ALUMINIUM LTD.

BANGALORE-560073 (INDIA)

1. ALL DIMENSIONS ARE IN mm.
2. ROUND OFF ALL SHARP CORNERS WITH 0.50 mm.
3. TOLERANCES WILL BE AS PER, IS:3965-1981 UNLESS OTHERWISE SPECIFIED

	NAME	DATE
DRAWN	J.P.KAUSHIK	07-10-2017
CHECKED		
APPROVED	B.NATARAJA	13-10-2017
SCALE		1:1
AREA mm^2		3108.341
PERIMETER mm.		2612.179
WEIGHT kg/m		8.393

PARTY'S NAME	GENERAL CATEGORY, DELHI MARKET
PARTY'S DRAWING No.	AS PER SAMPLE
ALLOY & TEMPER	HE9 WP
DESCRIPTION	HEAT SINK SECTION

DRAWING No.	SECTION No.
P-17422-1	–
33605	33605