P-15869-1
S4960
33622

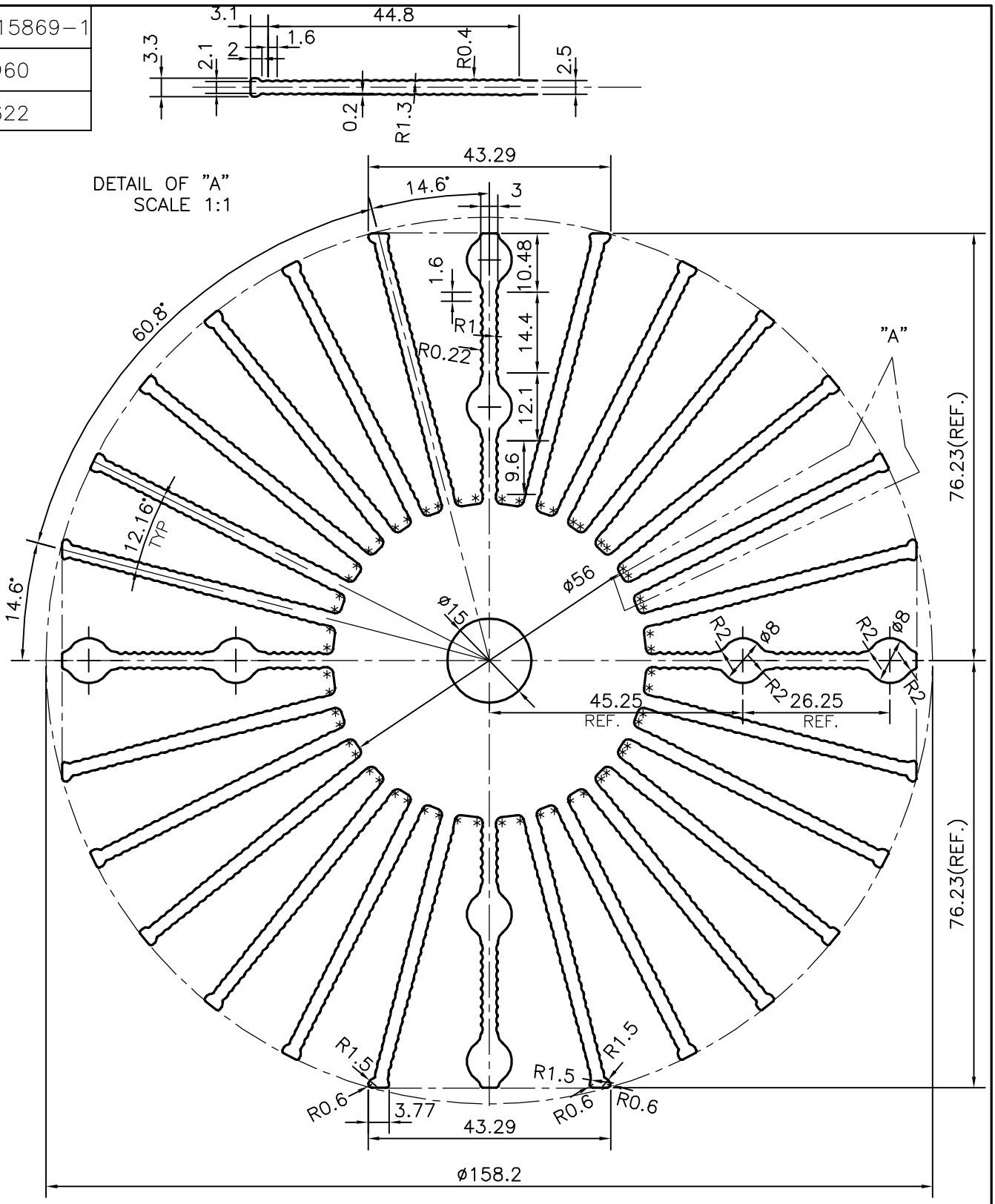

* = 1.0 RADIUS (55 PLACES)

			NAME	DATE
JINDAL SYMBOL OF QUALITY AN ISO 9001 COMPANY	*JINDAL ALUMINIUM LTD.* *BANGALORE-560073 (INDIA)*	DRAWN	J.P.KAUSHIK	12-07-2016
		CHECKED		
		APPROVED	S.S. GARG	13-07-2016

1. ALL DIMENSIONS ARE IN mm.
2. ROUND OFF ALL SHARP CORNERS WITH 0.40 mm.
3. TOLERANCES WILL BE AS PER, IS:6477-1983 UNLESS OTHERWISE SPECIFIED

SCALE		1:1	
AREA mm^2		6087.613	
PERIMETER mm.		3151.001	
WEIGHT kg/m		16.437	
		DRAWING No.	SECTION No.
PARTY'S NAME	PROMPTEC RENEWABLE ENERGY SOLUTIONS PVT. LTD., BANGALORE		
PARTY'S DRAWING No.	AS PER AutoCAD DRAWING & REQUIREMENT	P-15869-1	–
ALLOY & TEMPER	HE9 WP	S4960	S4960(ISSUE-2)
		33622	33622
DESCRIPTION	ROUND HEAT SINK SECTION		