P−10386−1
X1423
34035

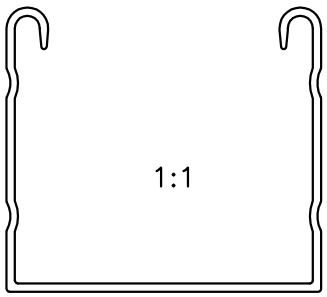

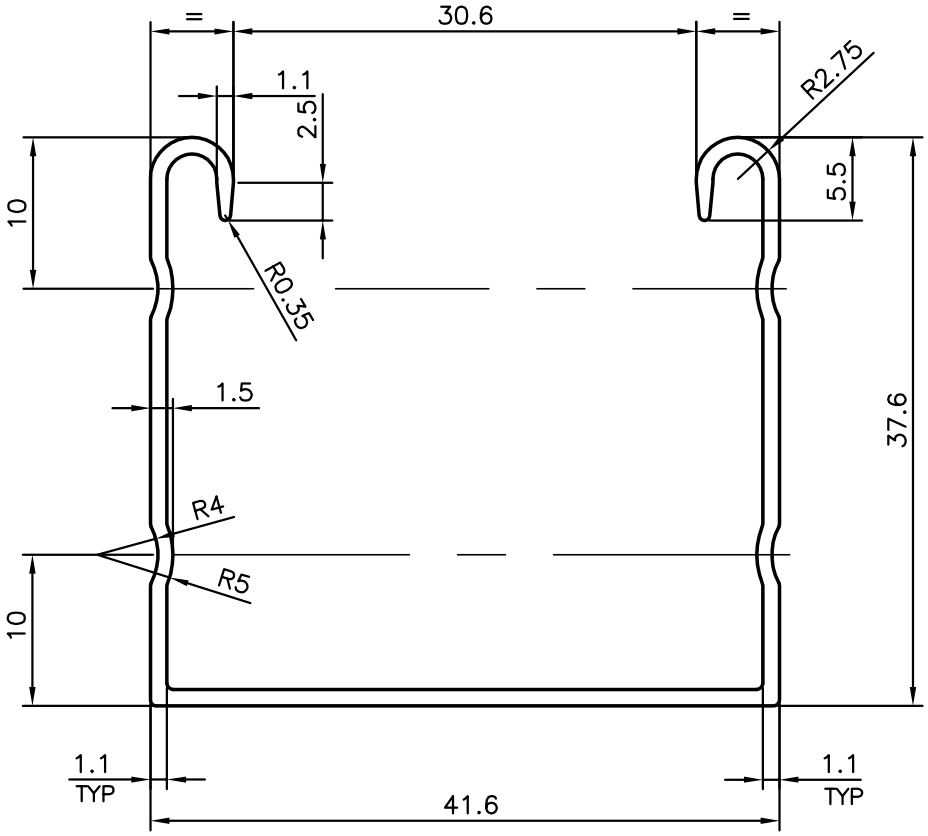

JINDAL SYMBOL OF QUALITY AN ISO 9001 COMPANY	*JINDAL ALUMINIUM LTD.* *BANGALORE−560073 (INDIA)*		NAME	DATE
		DRAWN	J.P.KAUSHIK	21−09−2010
		CHECKED		
		APPROVED	S.S.GARG	18−11−2010
1. ALL DIMENSIONS ARE IN mm. 2. ROUND OFF ALL SHARP CORNERS WITH 0.40 mm. 3. TOLERANCES WILL BE AS PER IS:3965−1981 UNLESS OTHERWISE SPECIFIED		SCALE		2:1
		AREA mm^2		139.006
		PERIMETER mm.		258.057
PARTY'S NAME	MATTS CORNER INDIA PVT. LTD., BANGALORE	WEIGHT kg/m		0.375
		DRAWING No.		SECTION No.
PARTY'S DRAWING No.	AS PER DRAWING	P−10386−1		
ALLOY & TEMPER	HE9 WP	X1423		X1423
		34035		34035
DESCRIPTION	MISC. CHANNEL			