P−16414
S5139
X2109
34105

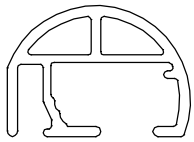

SCALE 1:1

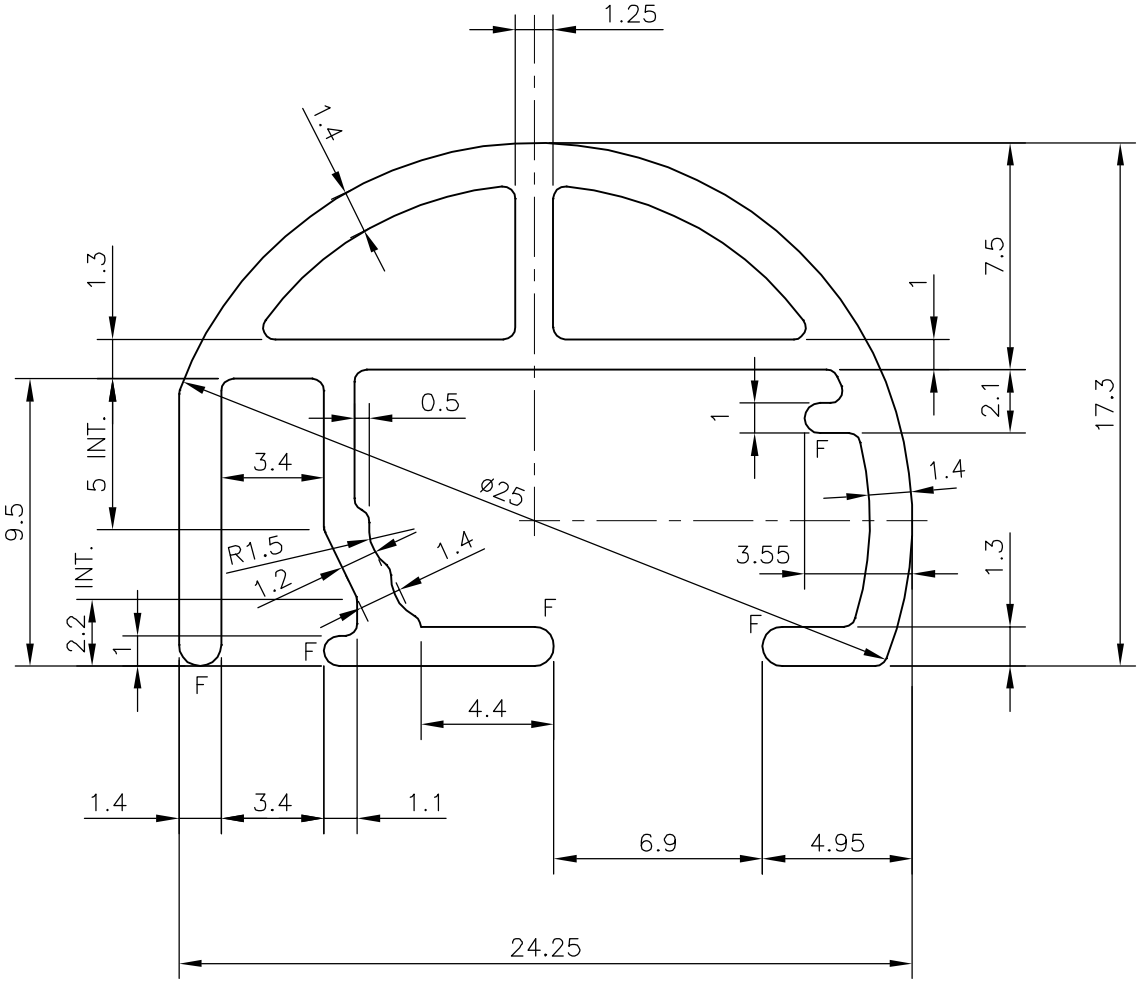

F : FULL RADIUS (5 PLACES)

			NAME	DATE
JINDAL SYMBOL OF QUALITY AN ISO 9001 COMPANY	*JINDAL ALUMINIUM LTD.* *BANGALORE−560073 (INDIA)*	DRAWN	KIRAN	01−10−2016
		CHECKED		
		APPROVED	B.NATARAJ	28−10−2016

1. ALL DIMENSIONS ARE IN mm.
2. ROUND OFF ALL SHARP CORNERS WITH 0.40 mm.
3. TOLERANCES WILL BE AS PER IS:6477−1983, UNLESS OTHERWISE SPECIFIED

SCALE	4:1
AREA mm^2	116.895
PERIMETER mm.	128.734
WEIGHT kg/m	0.316

PARTY'S NAME	AMBIENCE, BANGALORE
PARTY'S DRAWING No.	AS PER SAMPLE
ALLOY & TEMPER	63400 WP
DESCRIPTION	VENETIAN BLIND SECTION

DRAWING No.	SECTION No.
P−16414	
S5139	S5139
X2109	X2109
34105	34105