P-21094	
34114	

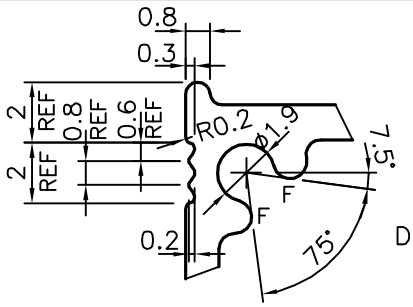

DETAIL OF "A"
SCALE 4:1

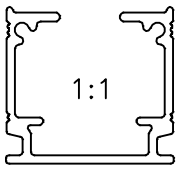

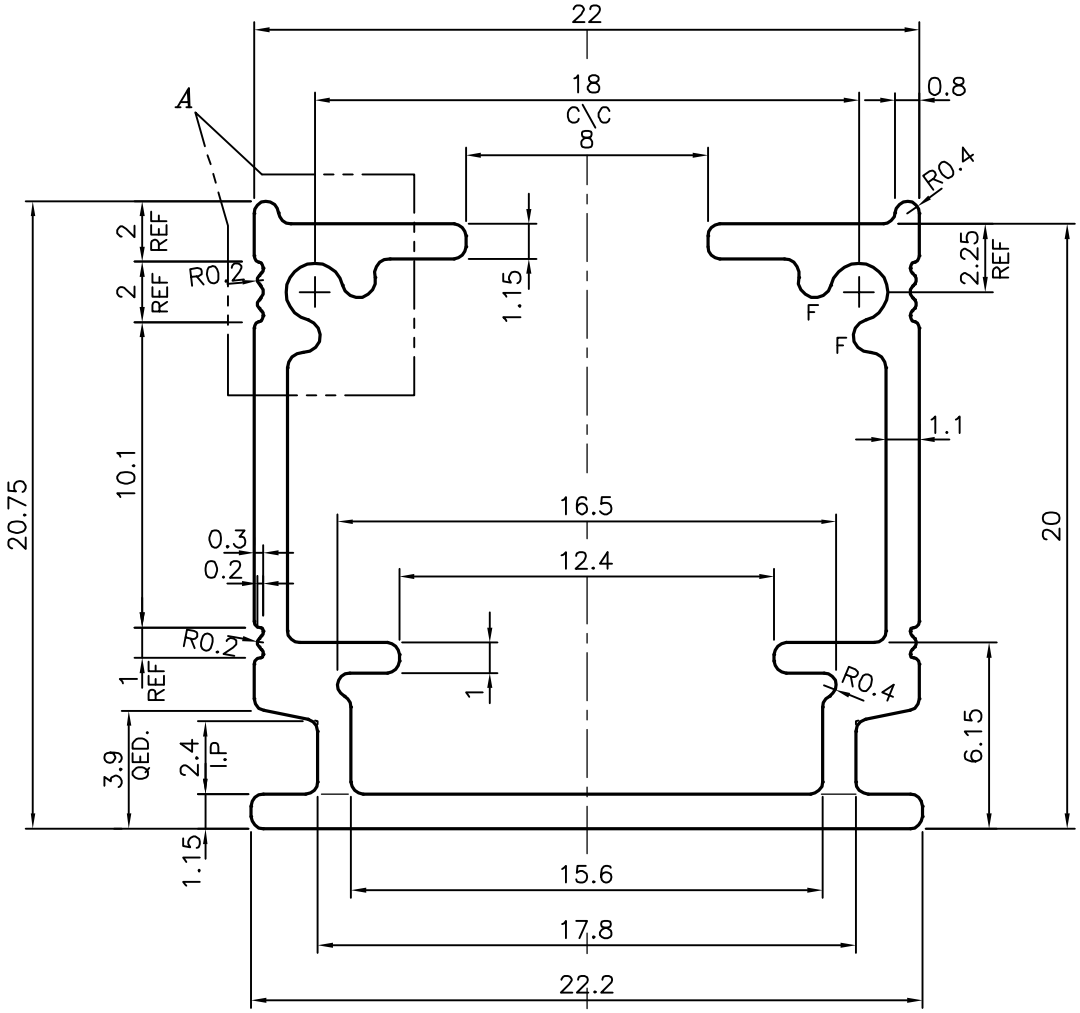

F = FULL RADIUS (4 PLACES

TOLERANCES ON OVERALL WIDTHS & WIDTHS ACROSS FLATS OF BARS, & REGULAR SECTIONS			
UPTO 6.40mm – ±0.20	UPTO 32.0mm – ±0.38	UPTO 120.0mm – ±0.85	UPTO 320.00mm – ±1.70
UPTO 10.0mm – ±0.23	UPTO 50.0mm – ±0.46	UPTO 160.0mm – ±1.02	
UPTO 12.0mm – ±0.25	UPTO 60.0mm – ±0.53	UPTO 200.0mm – ±1.14	
UPTO 16.0mm – ±0.28	UPTO 80.0mm – ±0.69	UPTO 250.0mm – ±1.40	
UPTO 25.0mm – ±0.30	UPTO 100.0mm – ±0.75	UPTO 300.0mm – ±1.65	

JINDAL
SYMBOL OF QUALITY
AN ISO 9001 COMPANY

JINDAL ALUMINIUM LTD.

BANGALORE-560073 (INDIA)

	NAME	DATE
DRAWN	J.P.KAUSHIK	19-06-2020
CHECKED		
APPROVED	B.NATARAJA	26-06-2020

1. ALL DIMENSIONS ARE IN mm.
2. ROUND OFF ALL SHARP CORNERS WITH 0.40 mm.
3. TOLERANCES WILL BE AS PER IS:3965-1981 UNLESS OTHERWISE SPECIFIED

SCALE	4:1
AREA mm^2	99.003
PERIMETER mm.	165.247
WEIGHT kg/m	0.267

PARTY'S NAME	AERO DESIGN ENTERPRISES, BANGALORE
PARTY'S DRAWING No.	AS PER SAMPLE
ALLOY & TEMPER	6063 T6
DESCRIPTION	VENETIAN BLIND SECTION

DRAWING No.	SECTION No.
P-21094	
34114	34114