P–11178
X1551
34575

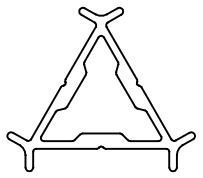

SCALE 1:1

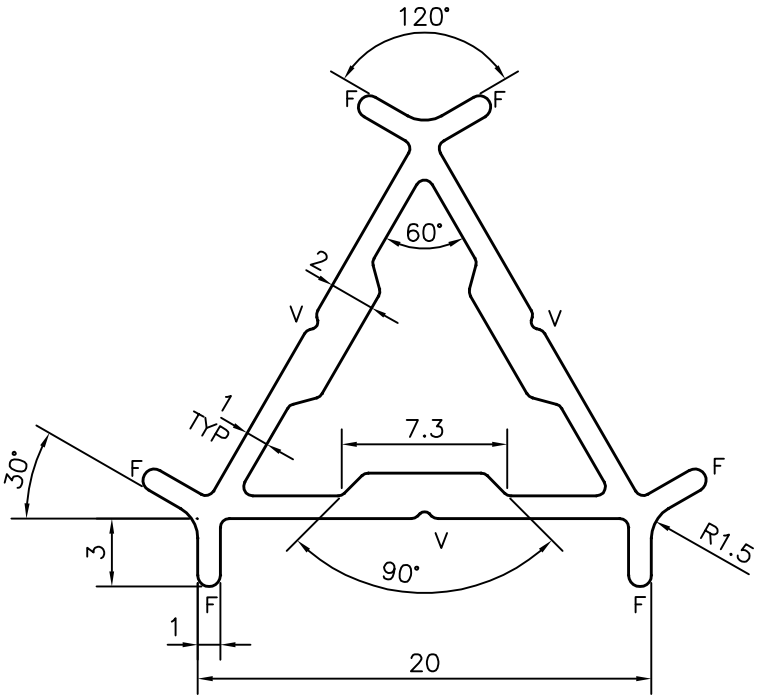

F = FULL RADIUS (6 PLACES)

V = V GROOVE 0.3x90° (3 PLACES)

JINDAL SYMBOL OF QUALITY AN ISO 9001 COMPANY	*JINDAL ALUMINIUM LTD.* *BANGALORE–560073 (INDIA)*		NAME	DATE
		DRAWN	PARVESH	26–08–2011
		CHECKED		
		APPROVED	S.S.GARG	03–10–2011
1. ALL DIMENSIONS ARE IN mm. 2. ROUND OFF ALL SHARP CORNERS WITH 0.40 mm. 3. TOLERANCES WILL BE AS PER, BS:EN–755–9 UNLESS OTHERWISE SPECIFIED		SCALE		3:1
		AREA mm^2		91.455
		PERIMETER mm.		92.476
		WEIGHT kg/m		0.247
PARTY'S NAME	VINAR SYSTEMS PVT., LTD., GURGAON	DRAWING No.		SECTION No.
PARTY'S DRAWING No.	AS PER SAMPLE	P–11178		–
ALLOY & TEMPER	63400 WP	X1551		X1551
		34575		34575
DESCRIPTION	MIS. TUBE			