P–8186–3
X889
35028

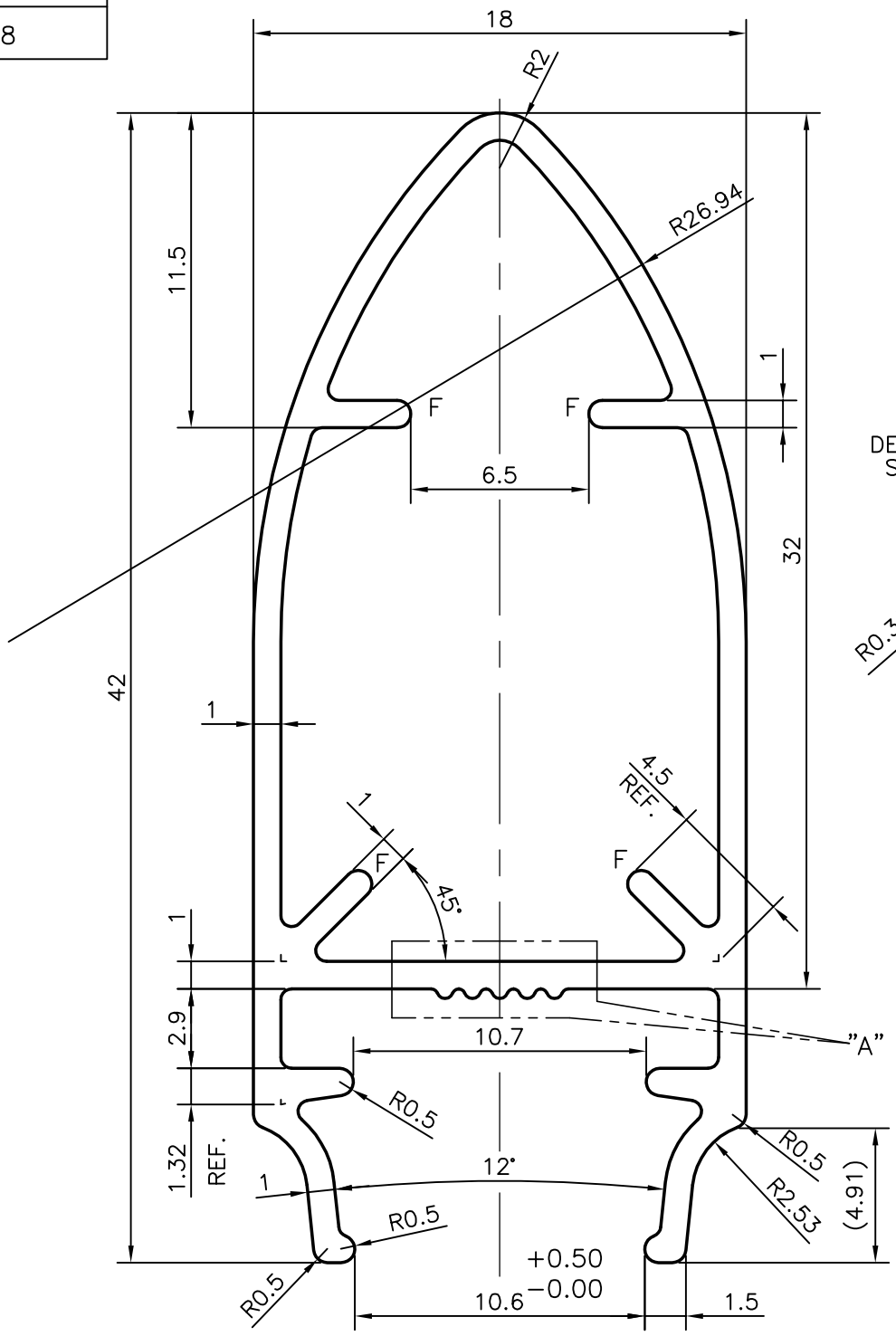

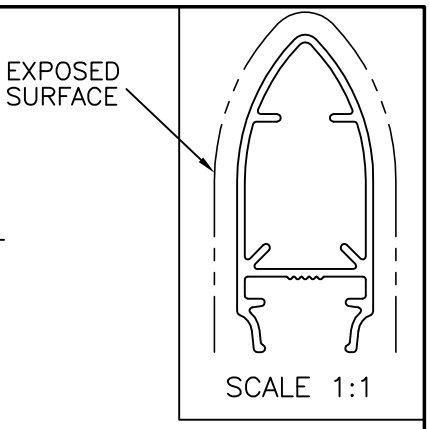

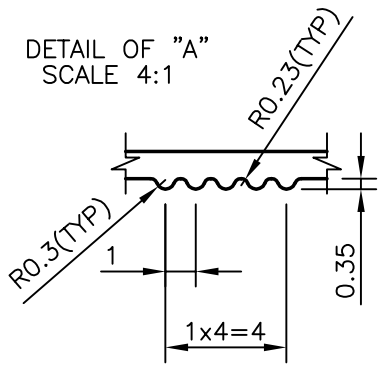

F = FULL RADIUS (4 PLACES)

			NAME	DATE
JINDAL SYMBOL OF QUALITY AN ISO 9001 COMPANY	*JINDAL ALUMINIUM LTD.* *BANGALORE–560073 (INDIA)*	DRAWN	PRASANNA.H	12–05–2008
		CHECKED		
		APPROVED		

1. ALL DIMENSIONS ARE IN mm.
2. ROUND OFF ALL SHARP CORNERS WITH 0.40 mm.
3. TOLERANCES WILL BE AS PER IS:6477–1983 UNLESS OTHERWISE SPECIFIED

SCALE		4:1	
AREA mm^2		129.803	
PERIMETER mm.		139.701	
WEIGHT kg/m		0.350	
PARTY'S NAME	ALKOSIGN DISPLAY SYSTEMS, MUMBAI	DRAWING No.	SECTION No.
PARTY'S DRAWING No.	AS PER DRAWING	P–8186–3	–
ALLOY & TEMPER	HE9 WP	X889	X889
DESCRIPTION	MISC. SECTION	35028	35028