P−10432−1
35031

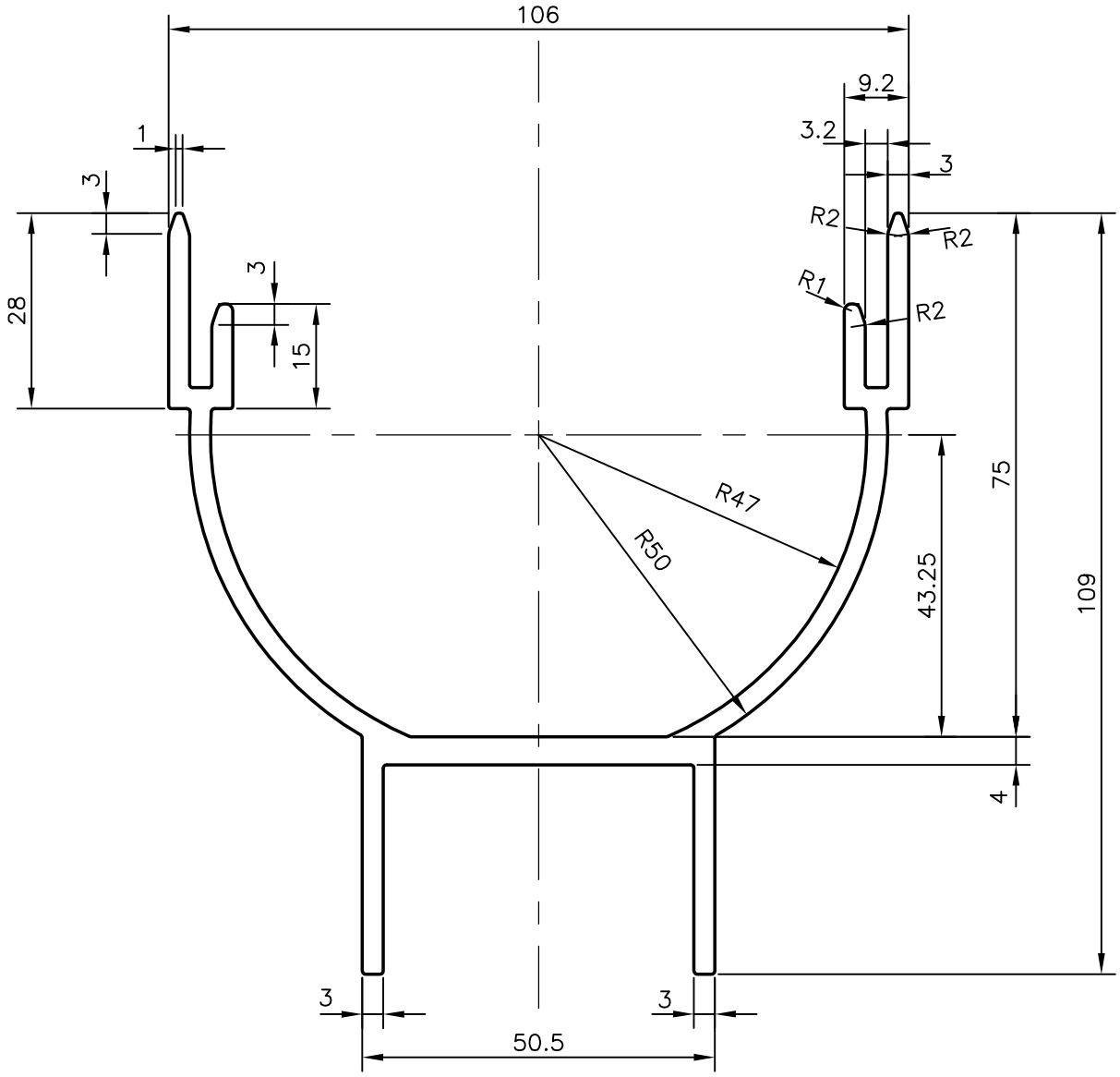

JINDAL SYMBOL OF QUALITY AN ISO 9001 COMPANY	*JINDAL ALUMINIUM LTD.* *BANGALORE−560073 (INDIA)*		NAME	DATE
		DRAWN	J.P.KAUSHIK	01−10−2010
		CHECKED		
		APPROVED	S.S.GARG	04−10−2010
1. ALL DIMENSIONS ARE IN mm. 2. ROUND OFF ALL SHARP CORNERS WITH 0.40 mm. 3. TOLERANCES WILL BE AS PER BS:EN−755 UNLESS OTHERWISE SPECIFIED		SCALE		1:1
		AREA mm^2		992.934
		PERIMETER mm.		624.947
		WEIGHT kg/m		2.681
PARTY'S NAME	SIGN WORKS LLC, UAE	DRAWING No.		SECTION No.
PARTY'S DRAWING No.	AS PER DRAWING	P−10432−1		−
ALLOY & TEMPER	6063 T6	35031		35031
DESCRIPTION/END USE	DISPLAY SECTION			