P–13581
S4097
35102

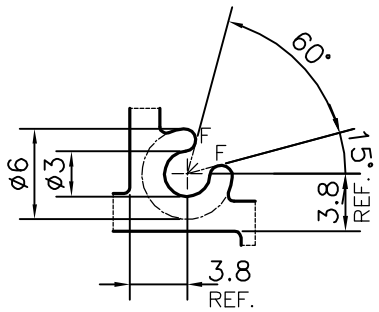

DETAIL OF "A"
SCALE 2:1

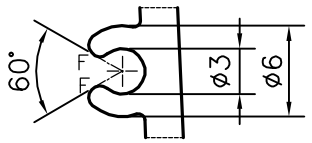

DETAIL OF "B"
SCALE 2:1

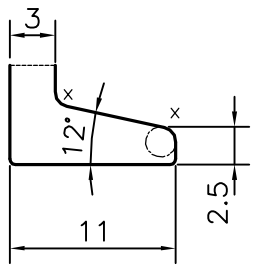

DETAIL OF "C"
SCALE 2:1

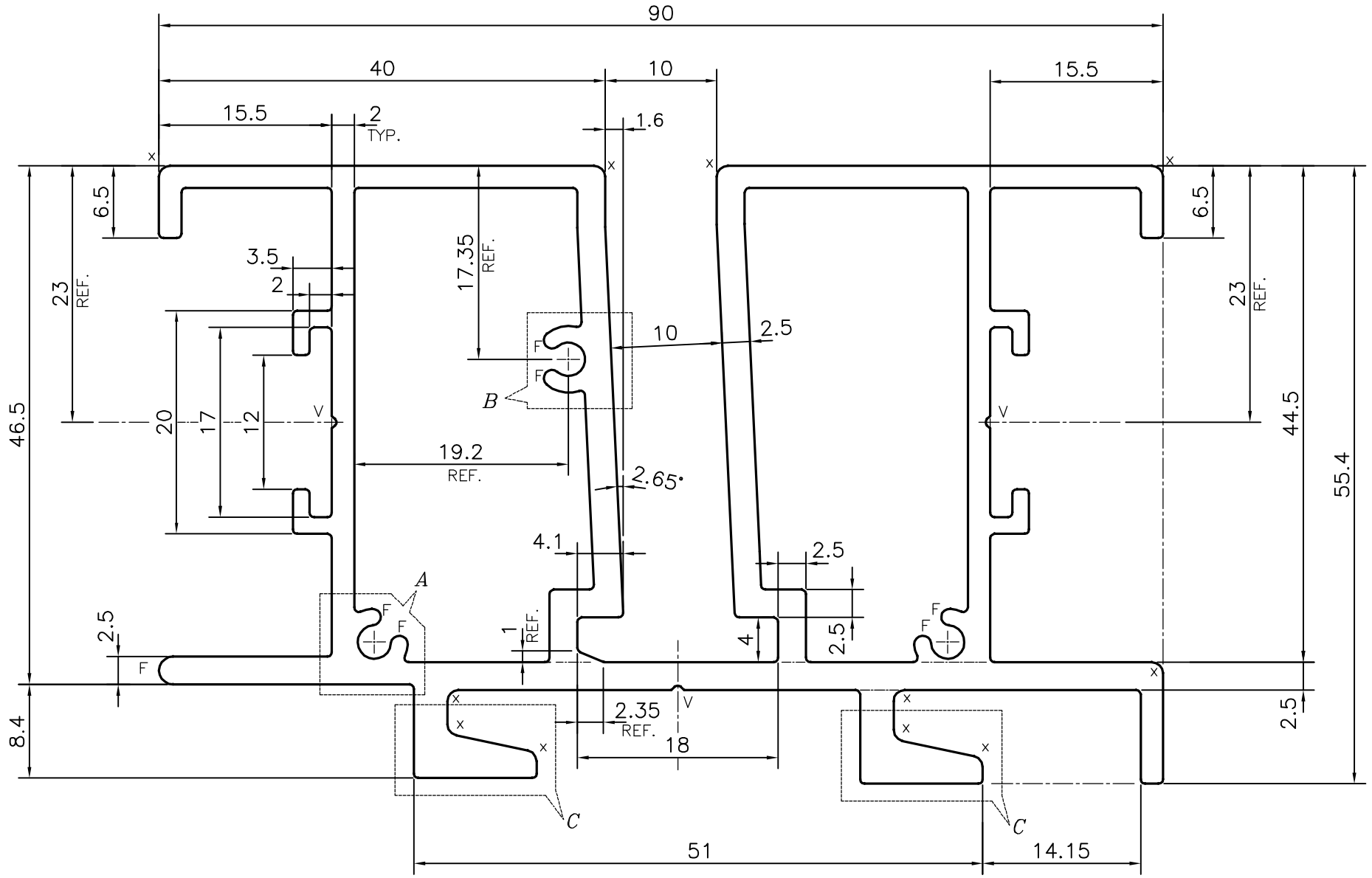

F = FULL RADIUS (7 PLACES)
X = RADIUS 1 mm. (11 PLACES)
V = VEE GROOVE 0.4x90° (3 PLACES)

EXPOSED SURFACES

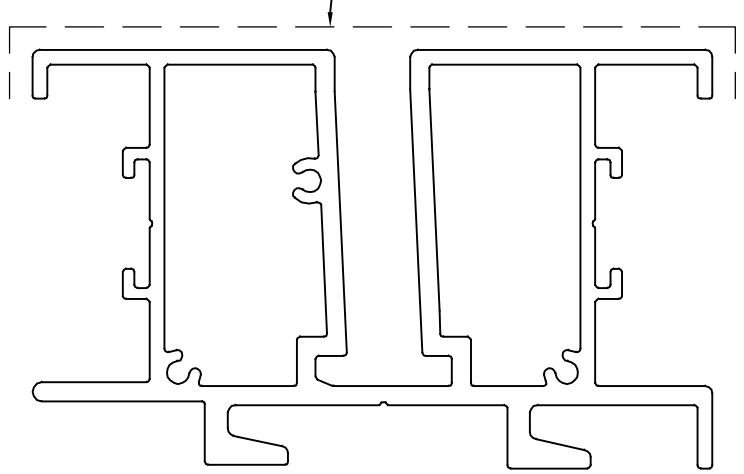

SCALE:– 1:1

TOLERANCES ON OVERALL WIDTHS & WIDTHS ACROSS FLATS OF BARS, & REGULAR SECTIONS			
UPTO 6.40mm – ±0.20	UPTO 32.0mm – ±0.38	UPTO 120.0mm – ±0.85	1. STRAIGHTNESS=1.7mm/M
UPTO 10.0mm – ±0.23	UPTO 50.0mm – ±0.46	UPTO 160.0mm – ±1.02	2. TWIST=1.7mm/M
UPTO 12.0mm – ±0.25	UPTO 60.0mm – ±0.53	UPTO 200.0mm – ±1.14	3. ANGULARITY= ±2°
UPTO 16.0mm – ±0.28	UPTO 80.0mm – ±0.69	UPTO 250.0mm – ±1.40	4. FLATNESS =0.007xWIDTH
UPTO 25.0mm – ±0.30	UPTO 100.0mm – ±0.75	UPTO 300.0mm – ±1.65	

JINDAL
SYMBOL OF QUALITY
AN ISO 9001 COMPANY

JINDAL ALUMINIUM LTD.
BANGALORE–560073 (INDIA)

	NAME	DATE
DRAWN	PARVESH	09–05–2014
CHECKED		
APPROVED	S.S.GARG	12–05–2014

1. ALL DIMENSIONS ARE IN mm.
2. ROUND OFF ALL SHARP CORNERS WITH 0.40 mm.
3. TOLERANCES WILL BE AS PER IS:6477–1983 , UNLESS OTHERWISE SPECIFIED

SCALE	2:1
AREA mm^2	983.318
PERIMETER mm.	572.099
WEIGHT kg/m	2.655

PARTY'S NAME	SURFACES, BANGALORE
PARTY'S DRAWING No.	AS PER AUTOCAD DRAWING
ALLOY & TEMPER	HE9 WP
DESCRIPTION	DISPLAY SECTION

DRAWING No.	SECTION No.
P–13581	–
S4097	S4097
35102	35102