P–14553
S4441
35118

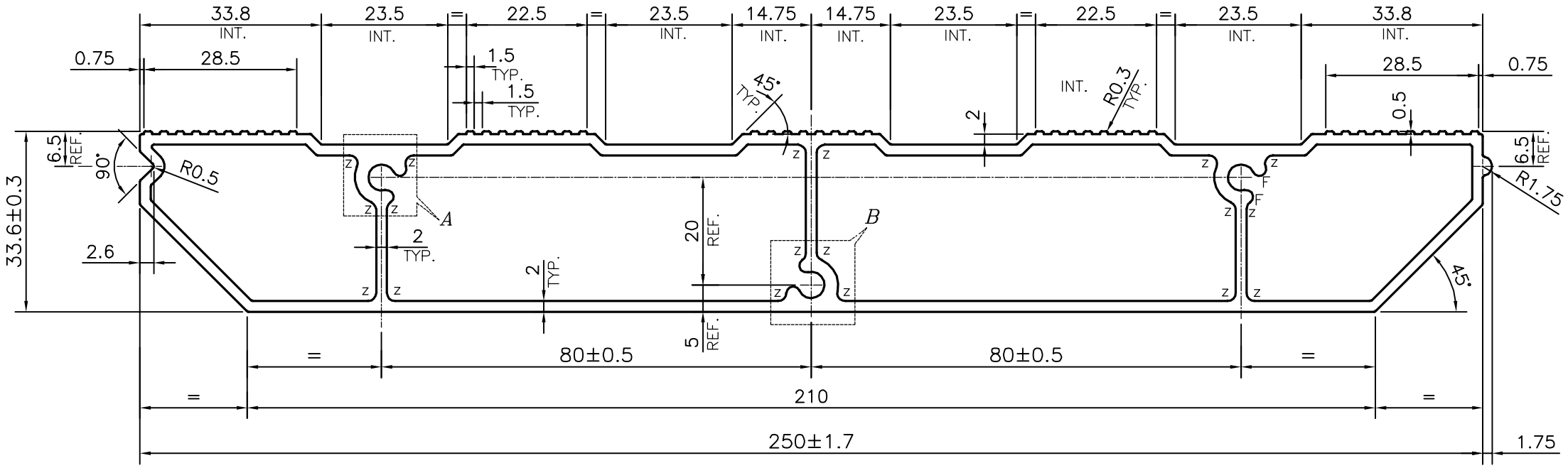

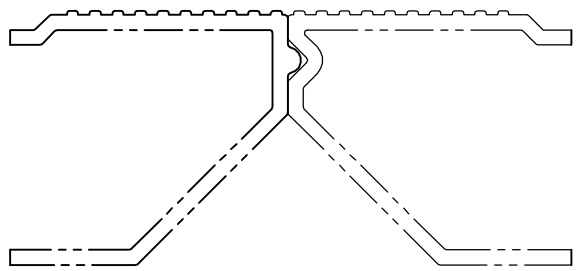

SELF MATCHING

Z = RADIUS 1.5 mm. (18 PLACES)
F = FULL RADIUS (6 PLACES)

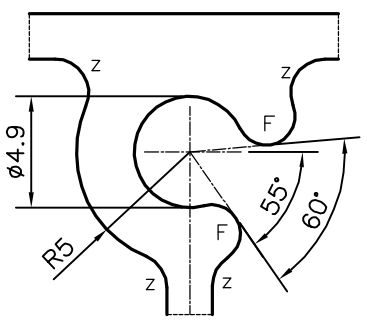

DETAIL OF "A"
SCALE 3:1

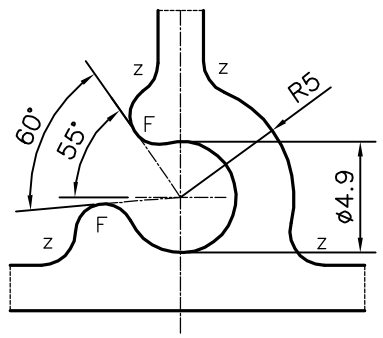

DETAIL OF "B"
SCALE 3:1

TOLERANCES ON OVERALL WIDTHS & WIDTHS ACROSS FLATS OF BARS, & REGULAR SECTIONS			
UPTO 6.40mm – ±0.20 UPTO 10.0mm – ±0.23 UPTO 12.0mm – ±0.25 UPTO 16.0mm – ±0.28 UPTO 25.0mm – ±0.30	UPTO 32.0mm – ±0.38 UPTO 50.0mm – ±0.46 UPTO 60.0mm – ±0.53 UPTO 80.0mm – ±0.69 UPTO 100.0mm – ±0.75	UPTO 120.0mm – ±0.85 UPTO 160.0mm – ±1.02 UPTO 200.0mm – ±1.14 UPTO 250.0mm – ±1.40 UPTO 300.0mm – ±1.65	1. STRAIGHTNESS=1.7mm/M 2. TWIST=1.7mm/M 3. ANGULARITY= ±2° 4. FLATNESS =0.007xWIDTH

SYMBOL OF QUALITY
AN ISO 9001 COMPANY

JINDAL ALUMINIUM LTD.
BANGALORE–560073 (INDIA)

	NAME	DATE
DRAWN	*PARVESH*	15–04–2015
CHECKED		
APPROVED	S.S.GARG	23–04–2015
SCALE		1:1
AREA mm^2		1377.999
PERIMETER mm.		585.204
WEIGHT kg/m		3.721

1. ALL DIMENSIONS ARE IN mm.
2. ROUND OFF ALL SHARP CORNERS WITH 0.40 mm.
3. TOLERANCES WILL BE AS PER IS:6477–1983 , UNLESS OTHERWISE SPECIFIED

		DRAWING No.	SECTION No.
PARTY'S NAME	SAGAR ASIA PVT. LTD., RANGA REDDY	P–14553	–
PARTY'S DRAWING No.	AS PER AUTOCAD DRAWING–SAP 238–00	S4441	S4441
ALLOY & TEMPER	6005 T5	35118	35118
DESCRIPTION	SCAFFOLDING SECTION–PLATFORM		