IAL–D7097
35182

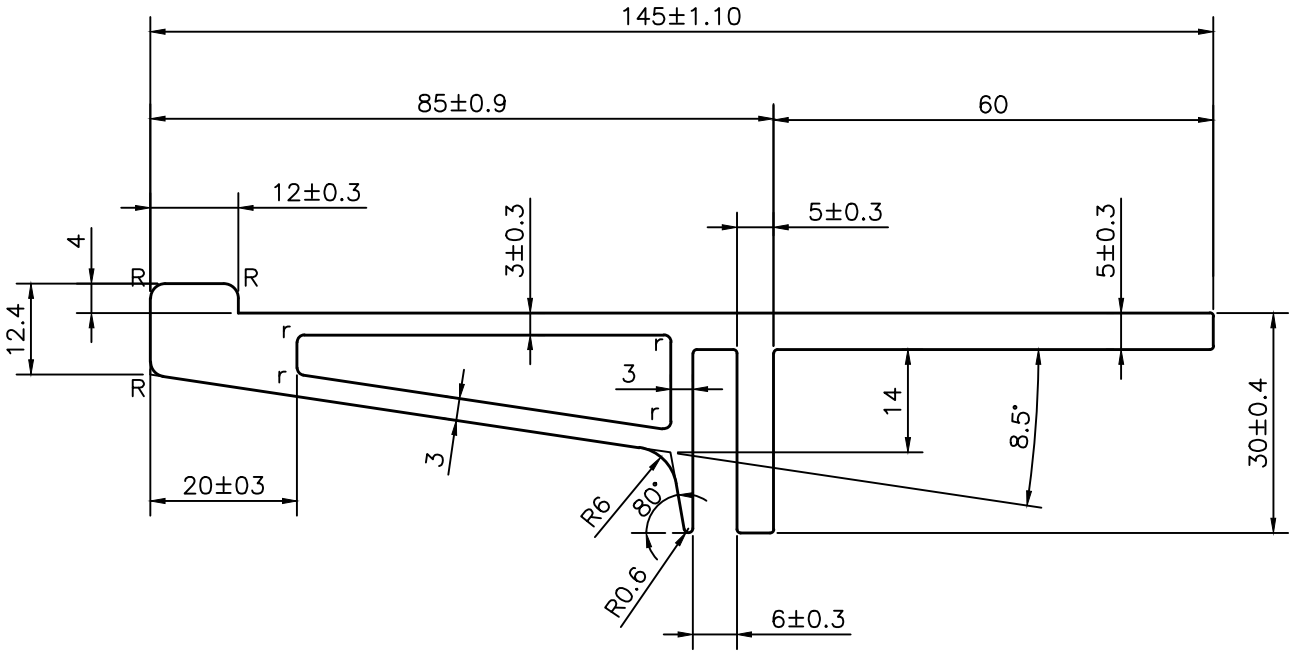

NOTE:–

R = 2.0R

r = 1.0R

Unmarked Radius = 0.5R

JINDAL SYMBOL OF QUALITY AN ISO 9001 COMPANY	*JINDAL ALUMINIUM LTD.* *BANGALORE–560073 (INDIA)*		NAME	DATE
		DRAWN	*S.K.SHARMA*	01–02–2022
		CHECKED		
		APPROVED		
1. ALL DIMENSIONS ARE IN mm. 2. ROUND OFF ALL SHARP CORNERS WITH 0.40 mm. 3. TOLERANCES WILL BE AS PER BS:EN–755–9 , UNLESS OTHERWISE SPECIFIED		SCALE		1:1
		AREA mm^2		1115.23
		PERIMETER mm.		391.01
		WEIGHT kg/m		3.011
PARTY'S NAME	M/S.R.K.METAL ART	DRAWING No.		SECTION No.
PARTY'S DRAWING No.	AS PER DRAWING	IAL–D–7097		–
ALLOY & TEMPER	63400 WP	35182		35182
DESCRIPTION	DISPLAY SECTION			