P–9249
S2179
35550

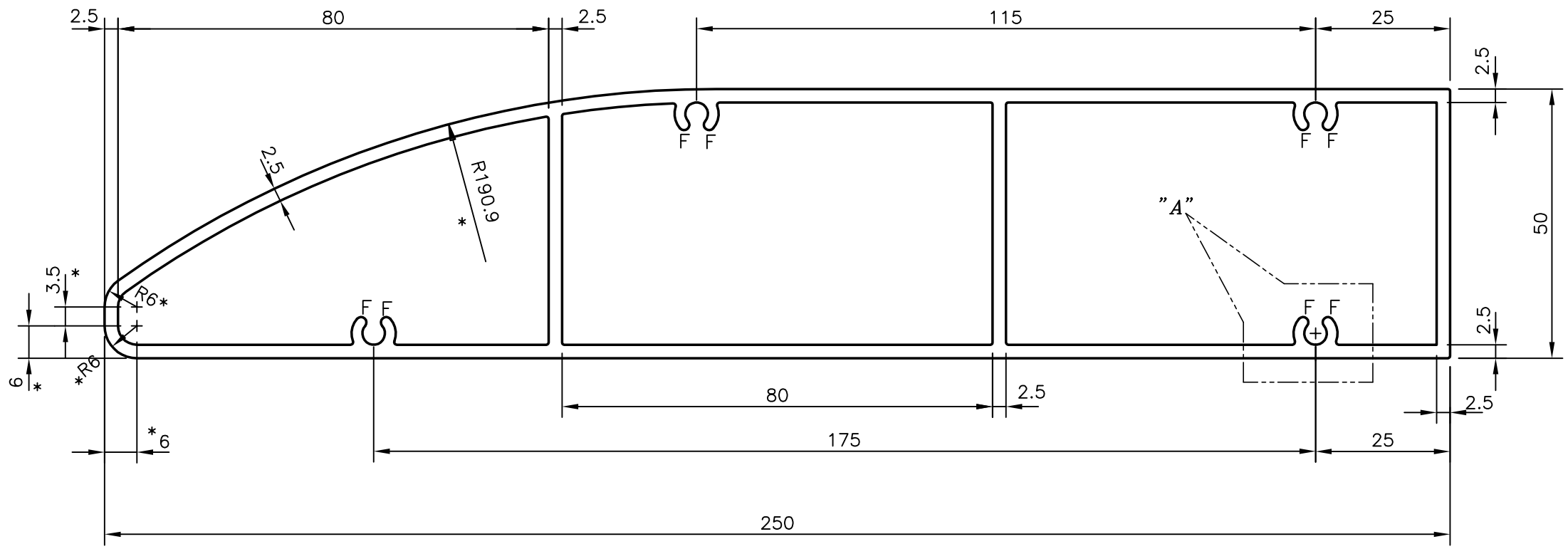

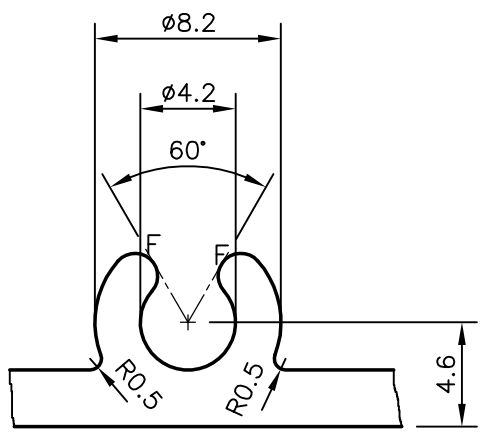

DETAIL"A"
SCALE 3:1

F = FULL RADIUS (8 PLACES)

* MARKED IMPORTANT DIMENSIONS

FLATNESS:– IMPORTANT

			NAME	DATE
JINDAL SYMBOL OF QUALITY AN ISO 9001 COMPANY	*JINDAL ALUMINIUM LTD.* *BANGALORE–560073 (INDIA)*	DRAWN	J.P.KAUSHIK	02–06–2009
		CHECKED		
		APPROVED		
1. ALL DIMENSIONS ARE IN mm. 2. ROUND OFF ALL SHARP CORNERS WITH 0.40 mm. 3. TOLERANCES WILL BE AS PER IS:6477–1983 UNLESS OTHERWISE SPECIFIED		SCALE		1:1
		AREA mm^2		1702.917
		PERIMETER mm.		567.238
		WEIGHT kg/m		4.598
PARTY'S NAME	SP FABRICATORS LTD., MUMBAI	DRAWING No.		SECTION No.
PARTY'S DRAWING No.	AL–555	P–9249		–
ALLOY & TEMPER	HE9 WP	S2179		S2179
		35550		35550
DESCRIPTION	MISC. SECTION			