P–9619
S2365
35567

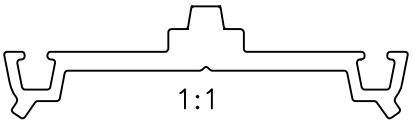

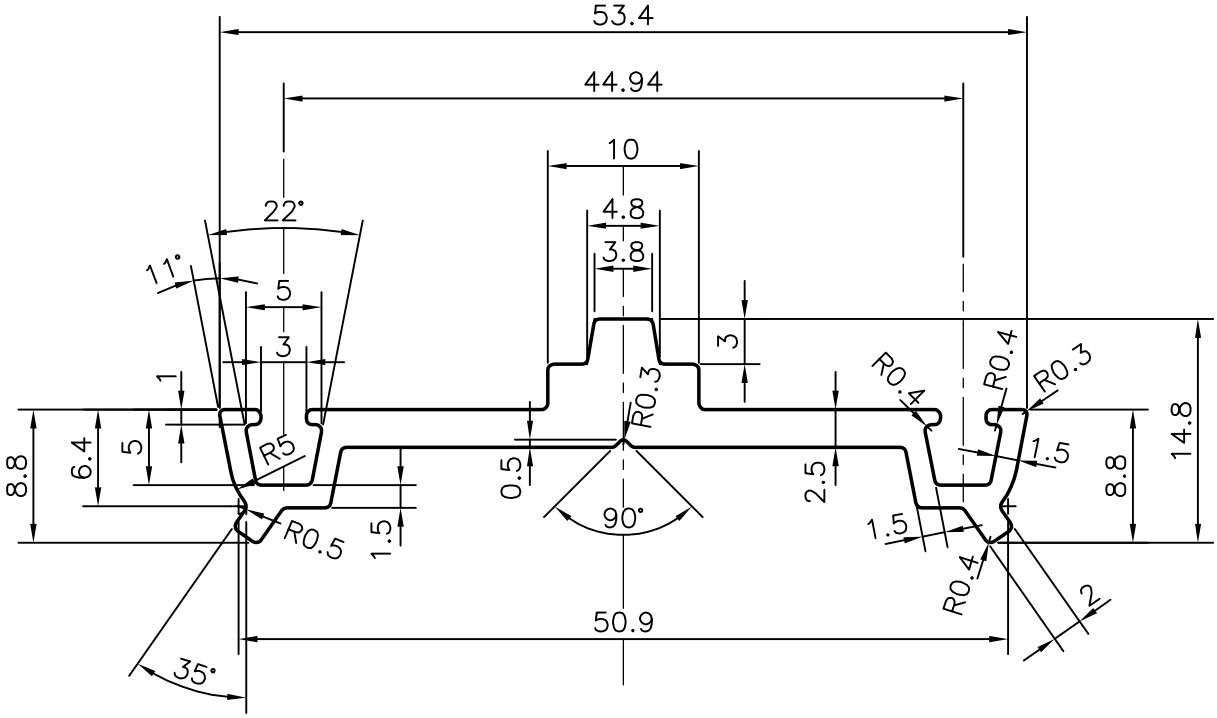

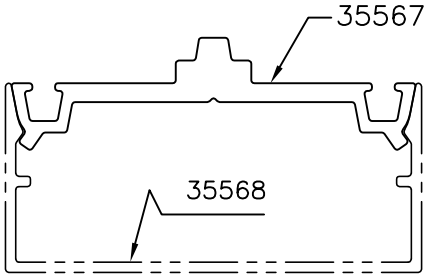

JINDAL SYMBOL OF QUALITY AN ISO 9001 COMPANY	*JINDAL ALUMINIUM LTD.* *BANGALORE–560073 (INDIA)*		NAME	DATE
		DRAWN	J.P.KAUSHIK	07–11–2009
		CHECKED		
		APPROVED		

1. ALL DIMENSIONS ARE IN mm.
2. ROUND OFF ALL SHARP CORNERS WITH 0.40 mm.
3. TOLERANCES WILL BE AS PER IS:3965–1981, UNLESS OTHERWISE SPECIFIED

SCALE	2:1
AREA mm^2	196.806
PERIMETER mm.	163.556
WEIGHT kg/m	0.531

		DRAWING No.	SECTION No.
PARTY'S NAME	S S FACADE PVT. LTD., GURGAON		
PARTY'S DRAWING No.	AS PER DRAWING	P–9619	–
ALLOY & TEMPER	6063 T6	S2365	S2365
		35567	35567
DESCRIPTION	PRESSURE PLATE–CURTAIN WALL		