P–9544
S2338
35620

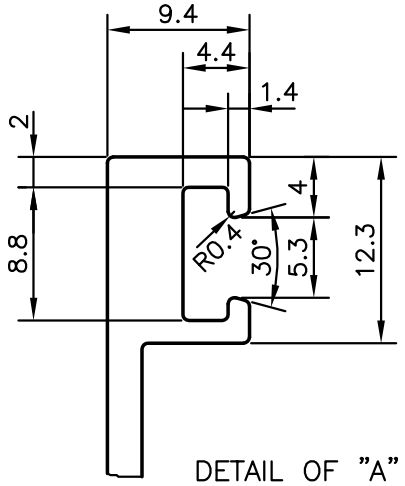

DETAIL OF "A"
SCALE 5:1

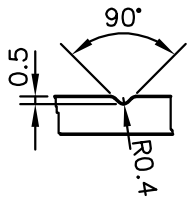

DETAIL OF V GROOVE

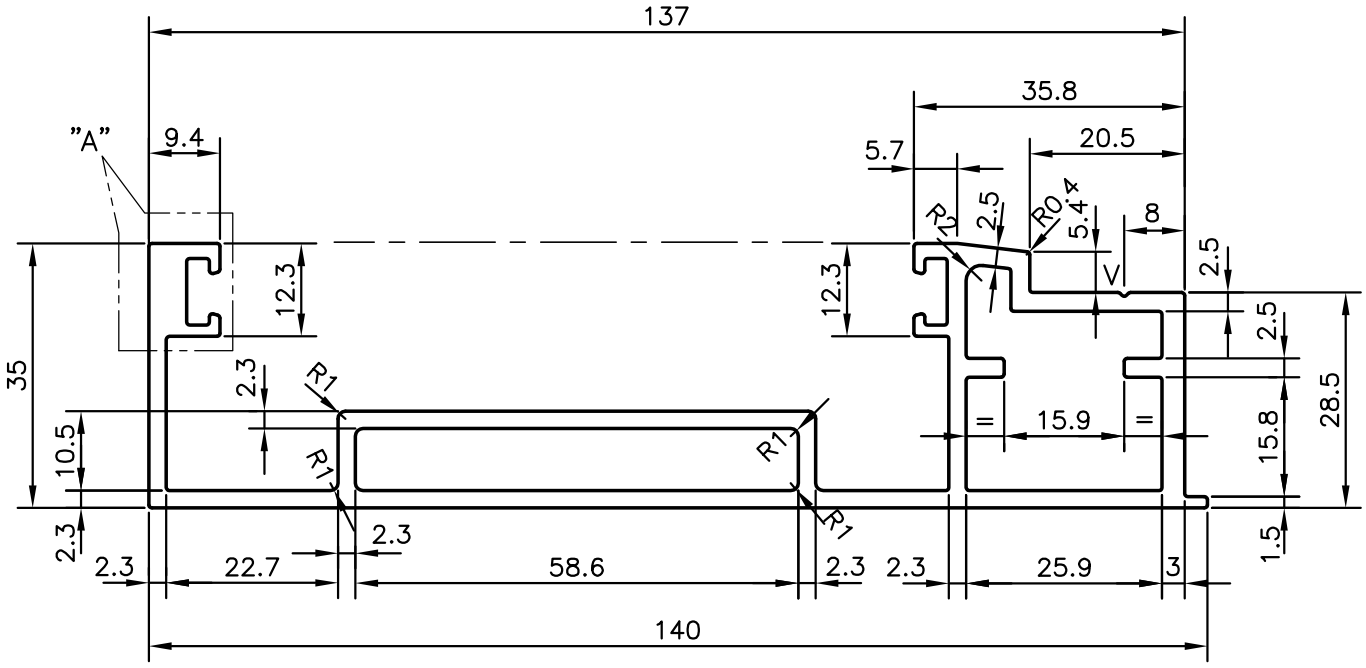

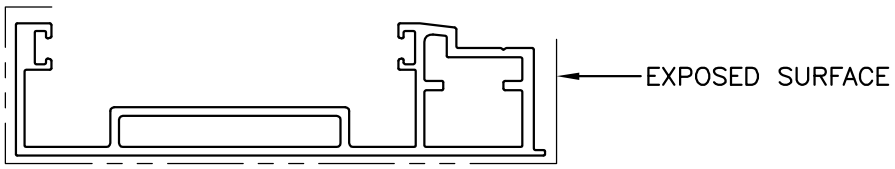

			NAME	DATE
JINDAL SYMBOL OF QUALITY AN ISO 9001 COMPANY	*JINDAL ALUMINIUM LTD.* *BANGALORE–560073 (INDIA)*	DRAWN	J.P.KAUSHIK	23–10–2009
		CHECKED		
		APPROVED		

1. ALL DIMENSIONS ARE IN mm.
2. ROUND OFF ALL SHARP CORNERS WITH 0.40 mm.
3. TOLERANCES WILL BE AS PER IS:6477–1983 UNLESS OTHERWISE SPECIFIED

SCALE	1:1
AREA mm^2	912.591
PERIMETER mm.	483.093
WEIGHT kg/m	2.464

PARTY'S NAME	SP FABRICATORS PVT. LTD., NAVI MUMBAI
PARTY'S DRAWING No.	AL–619
ALLOY & TEMPER	6063 T6
DESCRIPTION	AL. TRANSOM FEMALE PROFILE SECTION

DRAWING No.	SECTION No.
P–9544	–
S2338	S2338
35620	35620