P-9752-1
S2452
35654

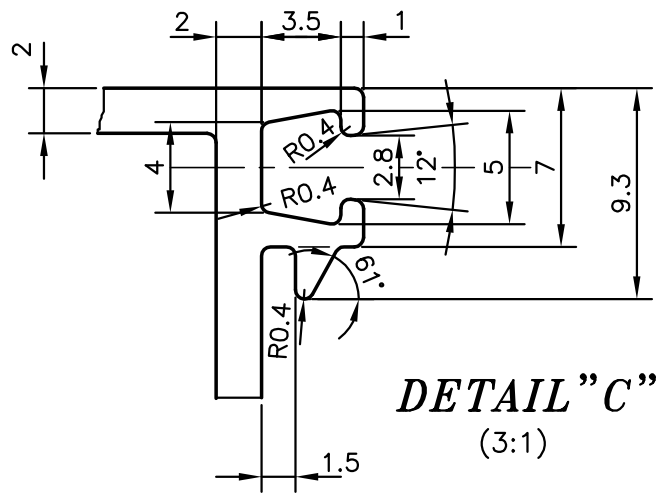

DETAIL"C"
(3:1)

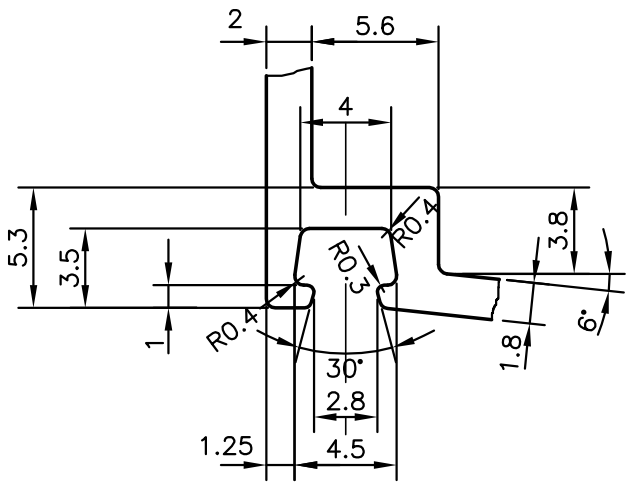

DETAIL"A"
(3:1)

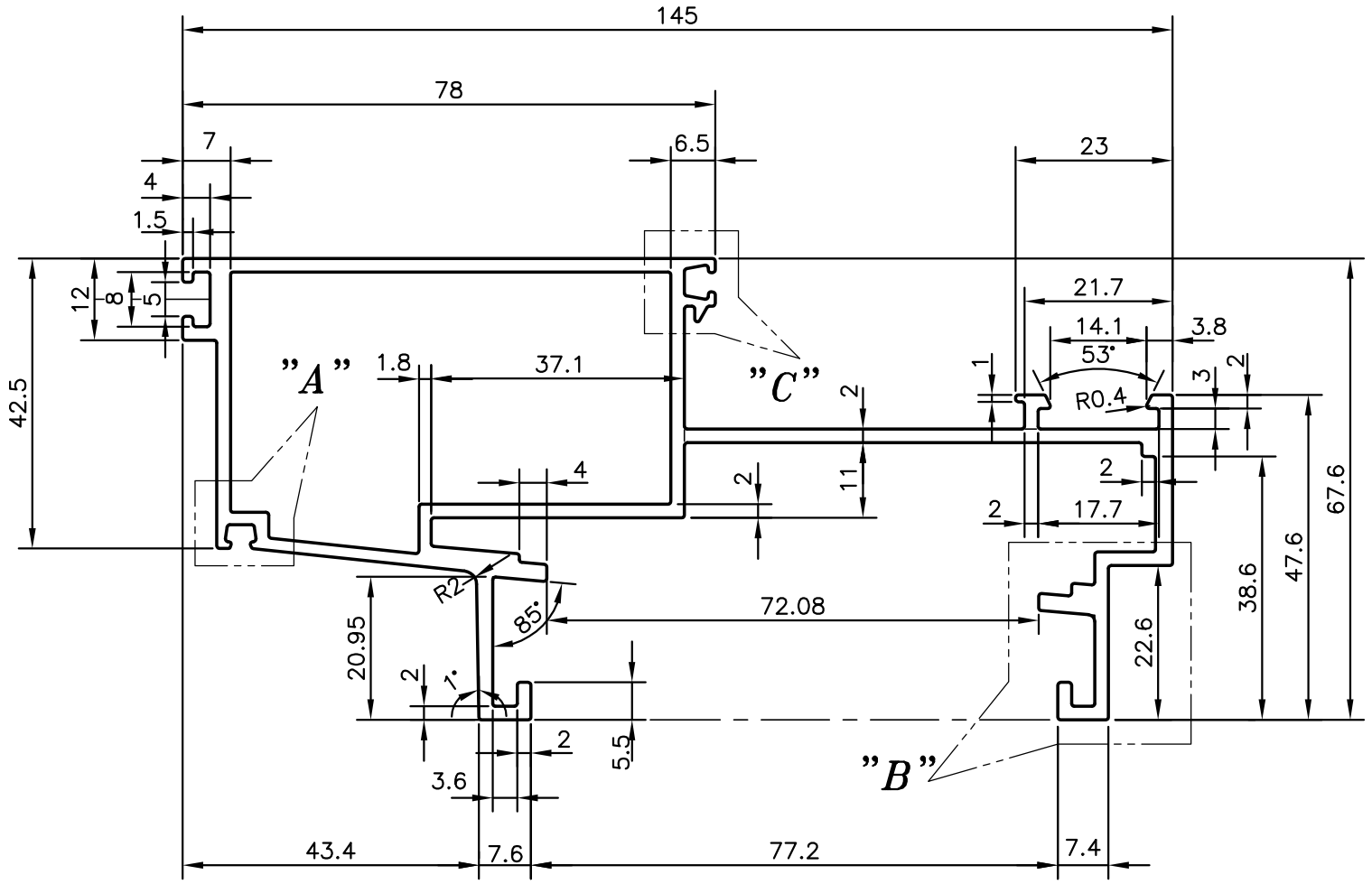

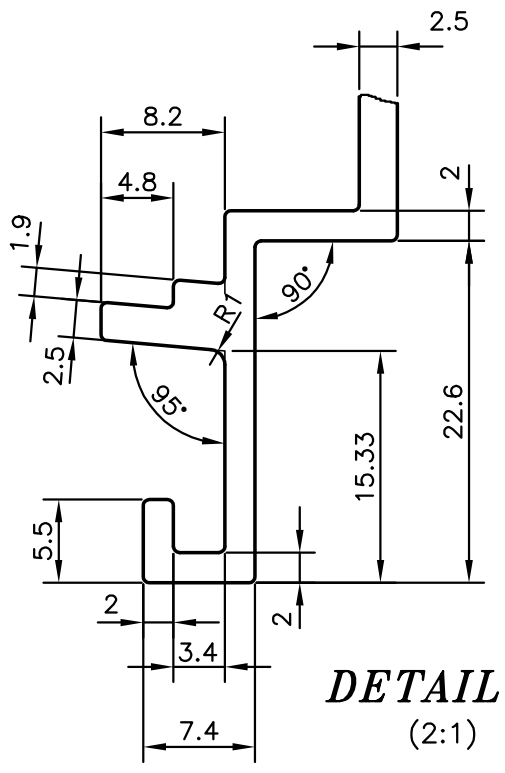

DETAIL"B"
(2:1)

JINDAL SYMBOL OF QUALITY AN ISO 9001 COMPANY	JINDAL ALUMINIUM LTD. BANGALORE-560073 (INDIA)		NAME	DATE
		DRAWN	J.P.KAUSHIK	19-01-2010
		CHECKED		
		APPROVED	S.S.GARG	17-02-2010
1. ALL DIMENSIONS ARE IN mm. 2. ROUND OFF ALL SHARP CORNERS WITH 0.40 mm. 3. TOLERANCES WILL BE AS PER IS:6477-1983, UNLESS OTHERWISE SPECIFIED		SCALE		1:1
		AREA mm^2		927.96
		PERIMETER mm.		669.189
		WEIGHT kg/m		2.505
PARTY'S NAME	SP FABRICATORS PVT. LTD., MUMBAI	DRAWING No.		SECTION No.
PARTY'S DRAWING No.	AL- 589	P-9752-1		-
ALLOY & TEMPER	6063 T6	S2452		S2452
		35654		35654
DESCRIPTION	SPLIT MALE MULLION SECTION			