P–11459
S3154
35657

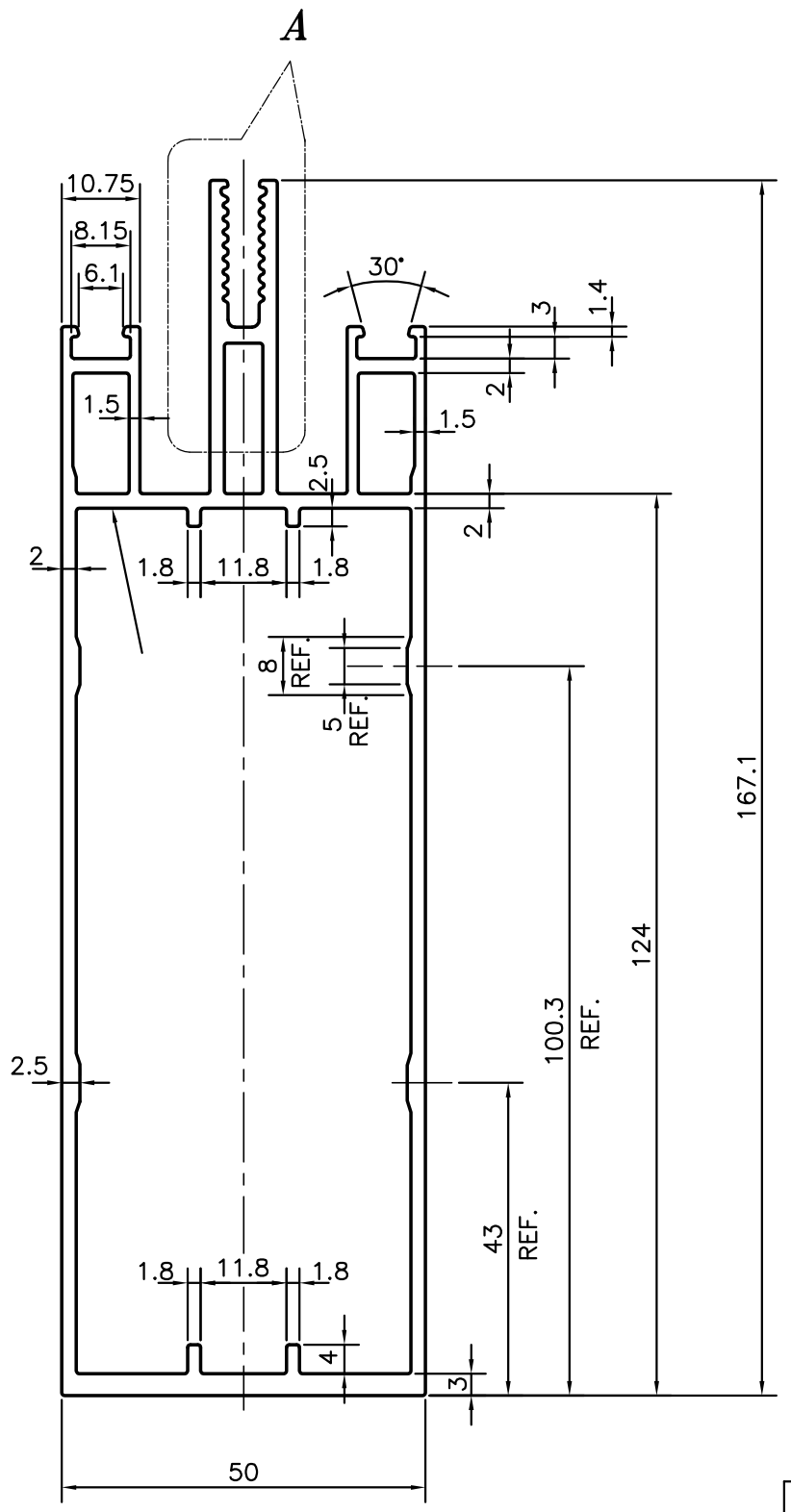

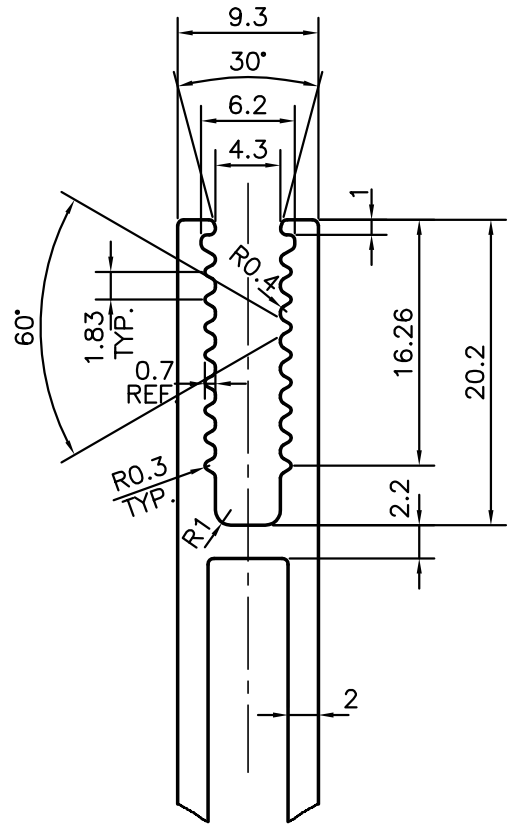

DETAIL OF 'A'

SCALE 2:1

JINDAL SYMBOL OF QUALITY AN ISO 9001 COMPANY	JINDAL ALUMINIUM LTD. BANGALORE–560073 (INDIA)		NAME	DATE
		DRAWN	PARVESH	10–01–2012
		CHECKED		
		APPROVED	S.S.GARG	18–01–2012
1. ALL DIMENSIONS ARE IN mm. 2. ROUND OFF ALL SHARP CORNERS WITH 0.40 mm. 3. TOLERANCES WILL BE AS PER IS:6477–1983 ,UNLESS OTHERWISE SPECIFIED		SCALE		1:1
		AREA mm^2		1130.552
		PERIMETER mm.		598.402
		WEIGHT kg/m		3.052
PARTY'S NAME	AJIT INDIA PVT. LTD., THANE	DRAWING No.		SECTION No.
PARTY'S DRAWING No.	AS PER DRAWING	P–11459		–
ALLOY & TEMPER	HE9 WP	S3154		S3154
		35657		35657
DESCRIPTION	CURTAIN WALL SECTION			