P–10020
S2546
35665

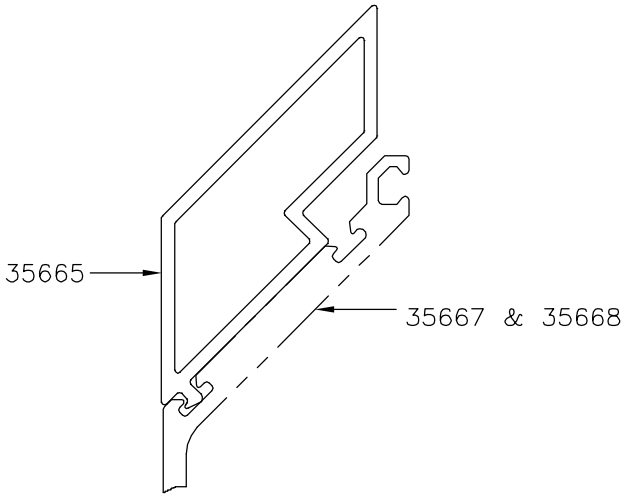

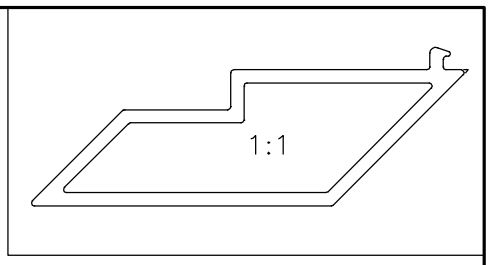

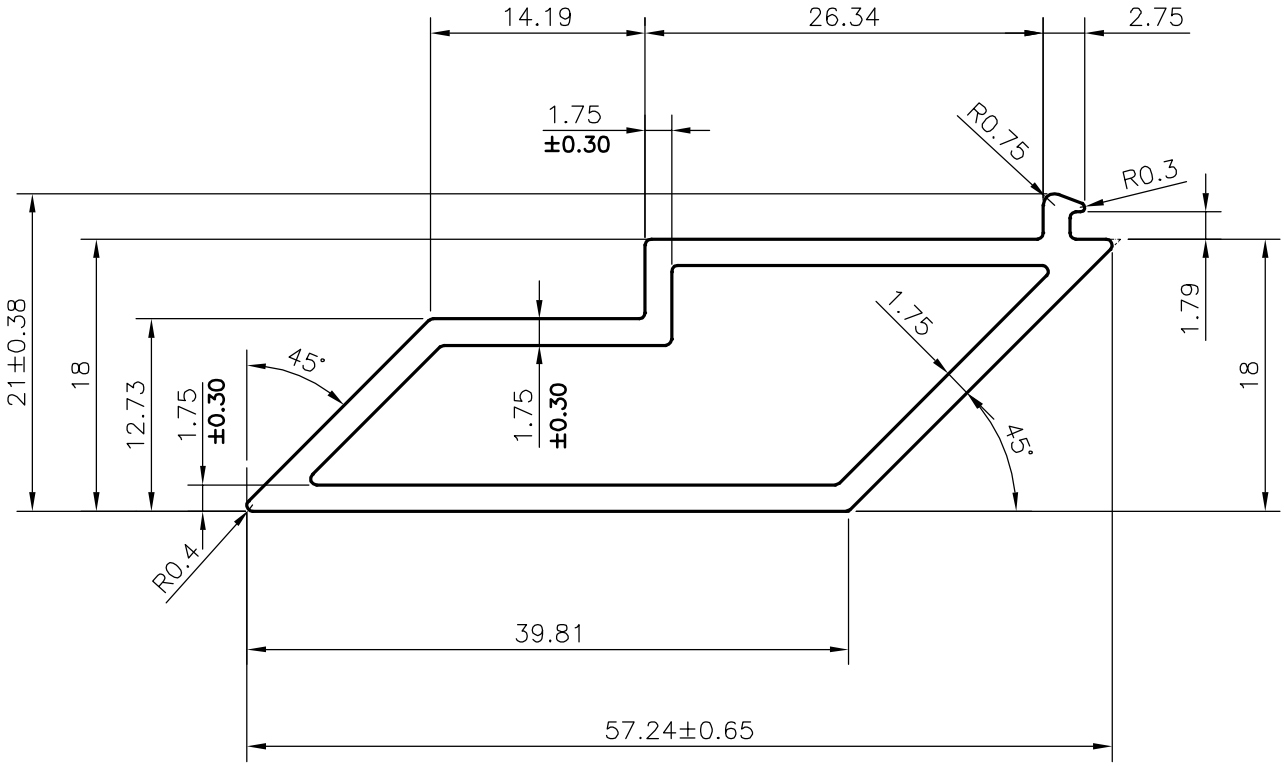

SECTION RETRIVE BACK AS ON 27/11/2020

*APPROXIMATE WEIGHT RANGE –**0.501 – 0.709 kg/m***

			NAME	DATE
SYMBOL OF QUALITY AN ISO 9001 COMPANY	*JINDAL ALUMINIUM LTD.* *BANGALORE–560073 (INDIA)*	DRAWN	DARPAN	27–11–2020
		CHECKED		
		APPROVED	B.NATARAJA	30–11–2020

1. ALL DIMENSIONS ARE IN mm.
2. ROUND OFF ALL SHARP CORNERS WITH 0.40 mm.
3. TOLERANCES WILL BE AS PER **IS:6477–1983** UNLESS OTHERWISE SPECIFIED

SCALE	2:1
AREA mm^2	224.248
PERIMETER mm.	138.8
WEIGHT kg/m	0.605

PARTY'S NAME	ALUPLEX INDIA PVT. LTD., HYDERABAD
PARTY'S DRAWING No.	AP–1098
ALLOY & TEMPER	6063 T6
DESCRIPTION	CURTAIN WALL SECTION

DRAWING No.	SECTION No.
P–10020	–
S2546	S2546
35665	35665