P–10035–1
S2556
35670

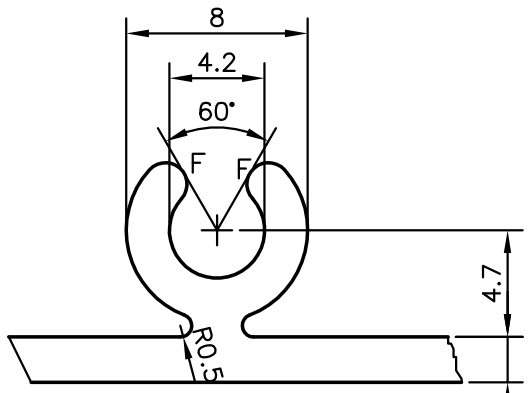

DETAIL"C"
(3:1)

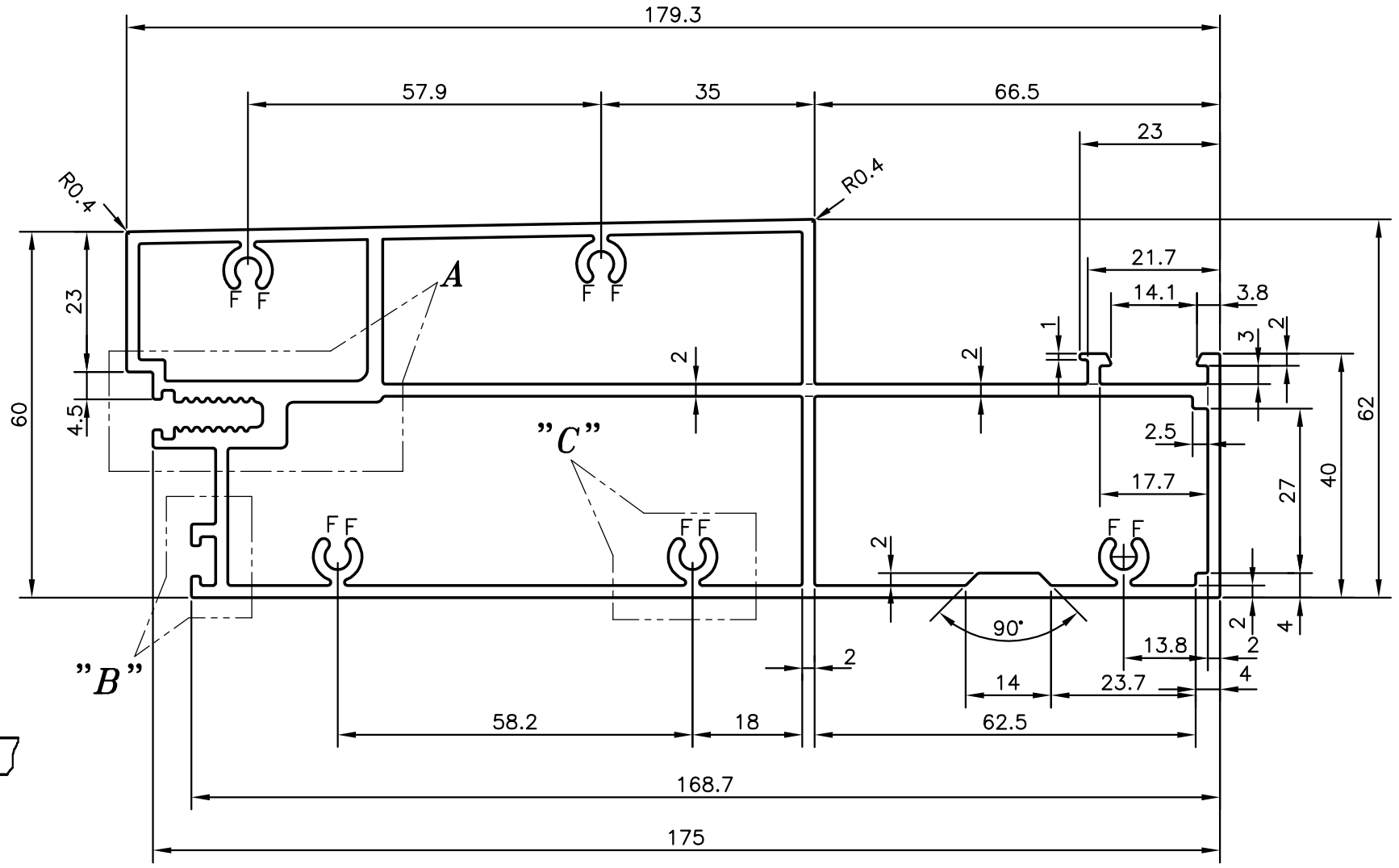

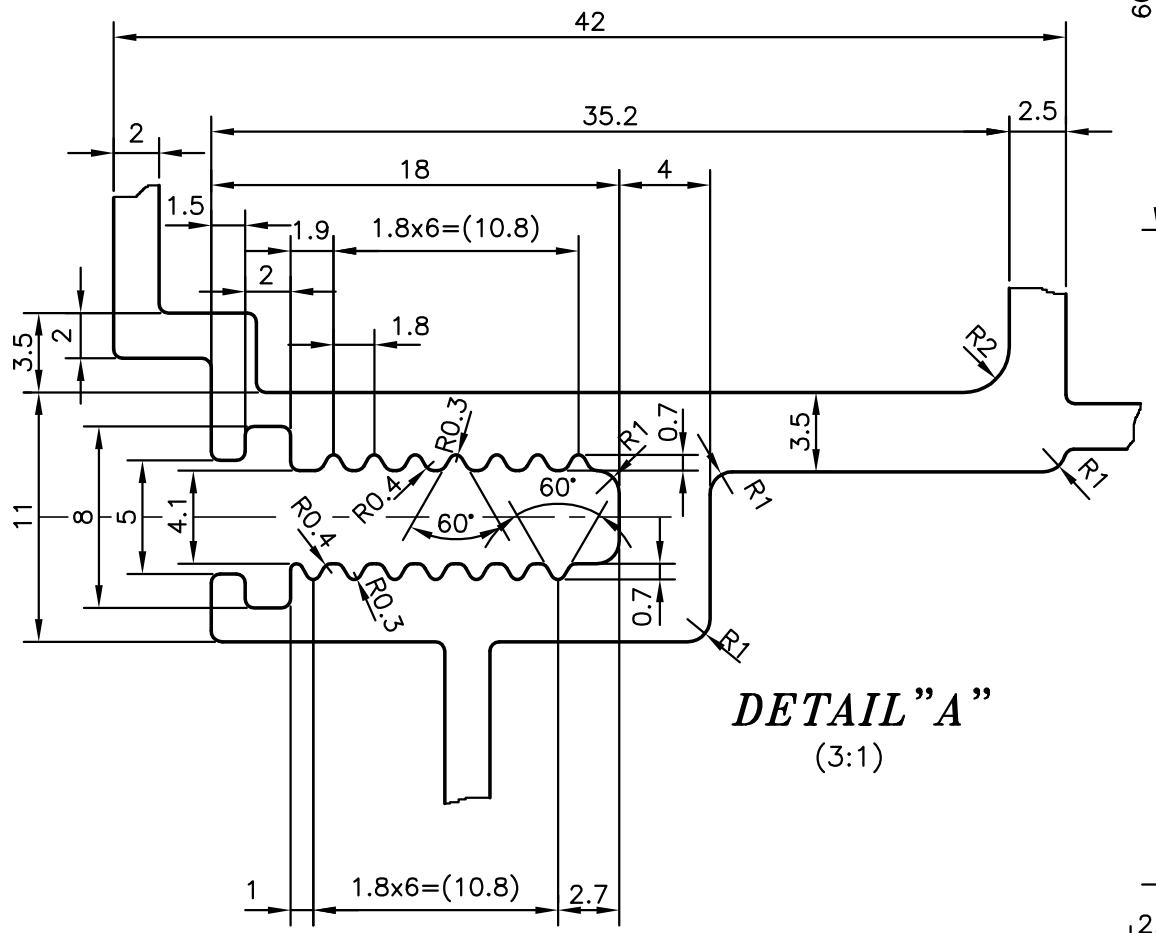

DETAIL"A"
(3:1)

F = FULL RADIUS (10 PLACES)

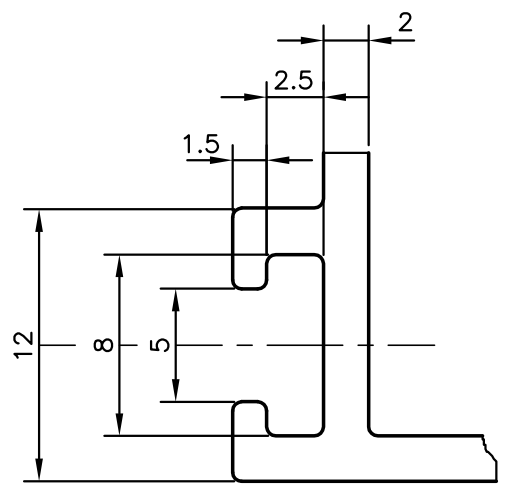

DETAIL"B"
(3:1)

JINDAL SYMBOL OF QUALITY AN ISO 9001 COMPANY	JINDAL ALUMINIUM LTD. BANGALORE–560073 (INDIA)		NAME	DATE
		DRAWN	J.P.KAUSHIK	02–06–2010
		CHECKED		
		APPROVED	S.S.GARG	14–06–2010
1. ALL DIMENSIONS ARE IN mm. 2. ROUND OFF ALL SHARP CORNERS WITH 0.40 mm. 3. TOLERANCES WILL BE AS PER IS:6477–1983 UNLESS OTHERWISE SPECIFIED		SCALE		1:1
		AREA mm²		1605.194
		PERIMETER mm.		574.71
		WEIGHT kg/m		4.334
PARTY'S NAME	SP FABRICATORS PVT. LTD., MUMBAI	DRAWING No.		SECTION No.
PARTY'S DRAWING No.	AL– 594 REV–02	P–10035–1		–
ALLOY & TEMPER	6063 T6	S2556		S2556
		35670		35670
DESCRIPTION	MULLION SECTION			