P–10279
S2652
35677

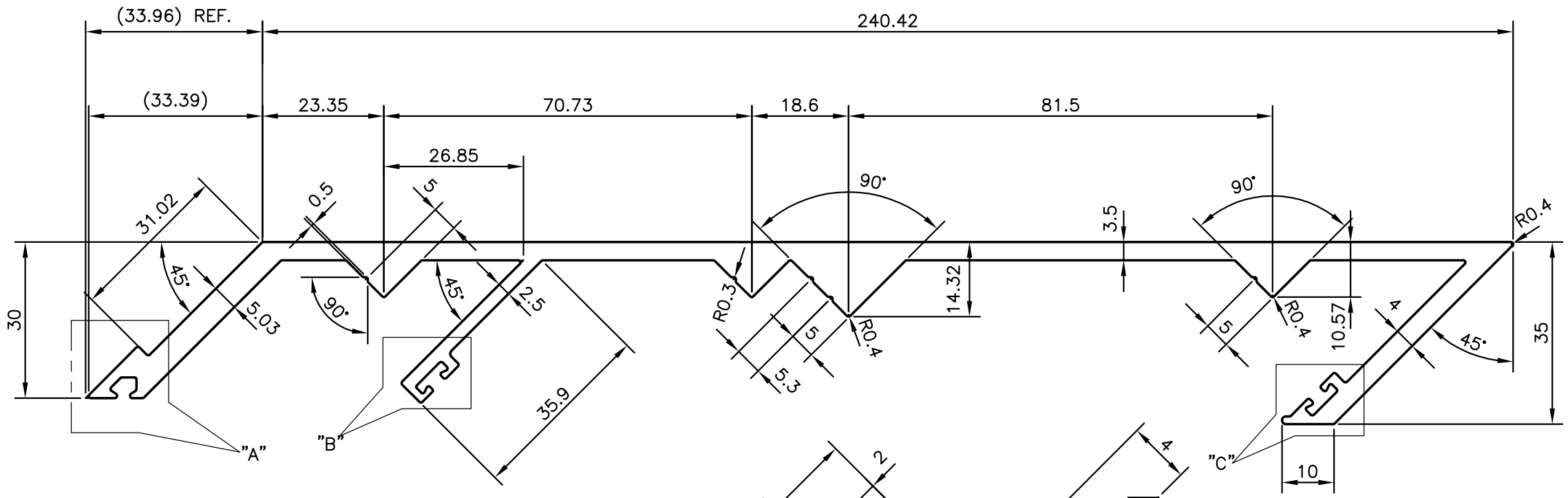

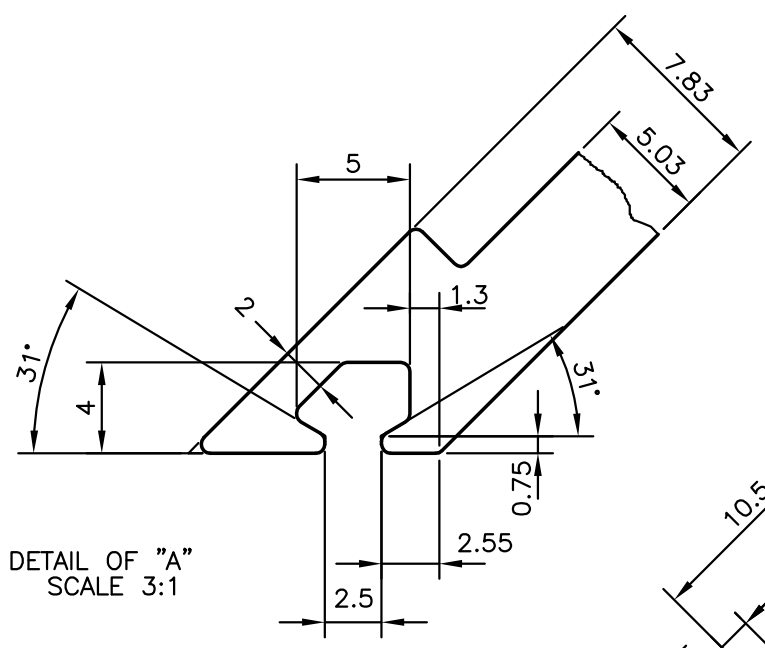

DETAIL OF "A"
SCALE 3:1

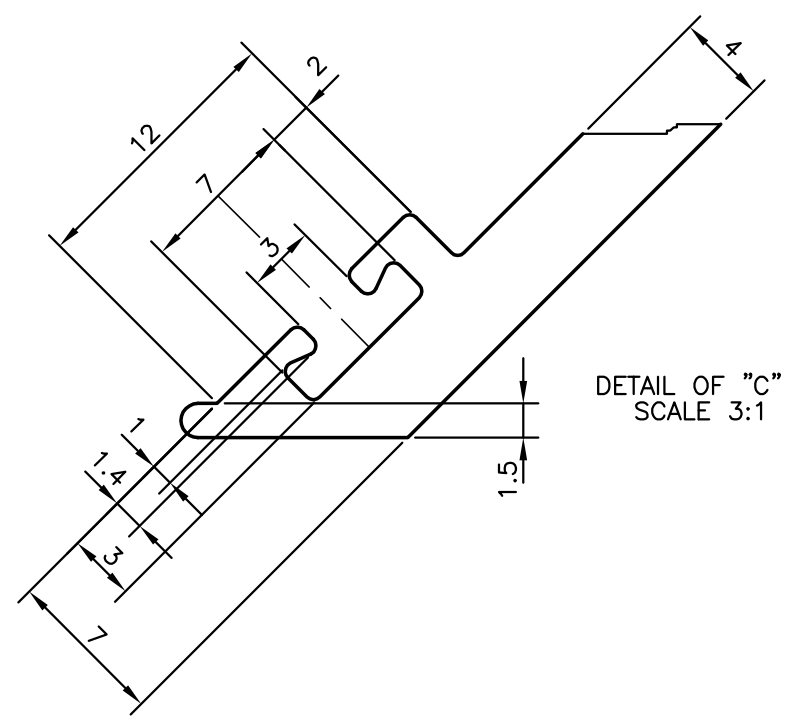

DETAIL OF "C"
SCALE 3:1

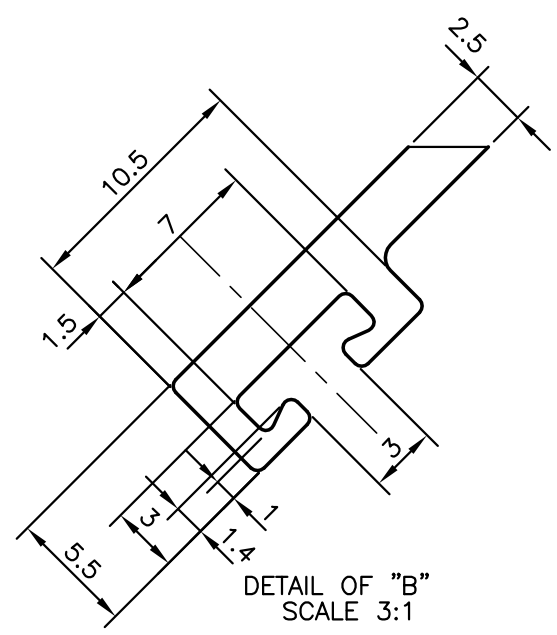

DETAIL OF "B"
SCALE 3:1

JINDAL SYMBOL OF QUALITY AN ISO 9001 COMPANY	*JINDAL ALUMINIUM LTD.* *BANGALORE–560073 (INDIA)*		NAME	DATE
		DRAWN	J.P.KAUSHIK	07–08–2010
		CHECKED		
		APPROVED	S.S.GARG	17–08–2010
1. ALL DIMENSIONS ARE IN mm. 2. ROUND OFF ALL SHARP CORNERS WITH 0.40 mm. 3. TOLERANCES WILL BE AS PER IS:3965–1981 UNLESS OTHERWISE SPECIFIED		SCALE		1:1
		AREA mm^2		1631.317
		PERIMETER mm.		810.014
		WEIGHT kg/m		4.405
PARTY'S NAME	GWS ENGINEERS & FABRICATORS PVT.LTD.,MUMBAI	DRAWING No.		SECTION No.
PARTY'S DRAWING No.	AS PER DRAWING	P–10279		–
ALLOY & TEMPER	HE9 WP	S2652 35677		S2652 35677
DESCRIPTION	UNITIZEED MALE MULLION			