P-10369-2
S2727
35681

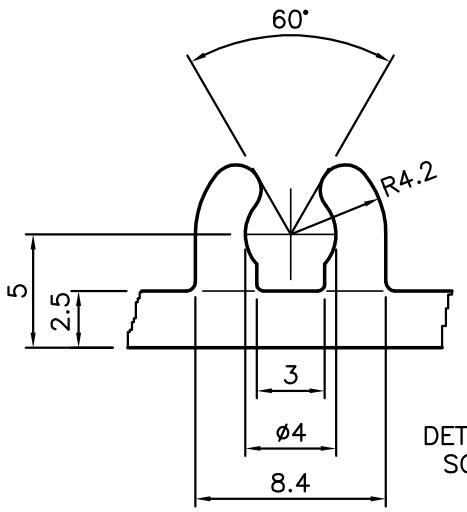

DETAIL OF "C"
SCALE 3:1

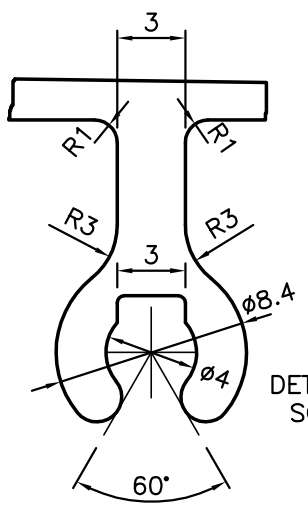

DETAIL OF "D"
SCALE 3:1

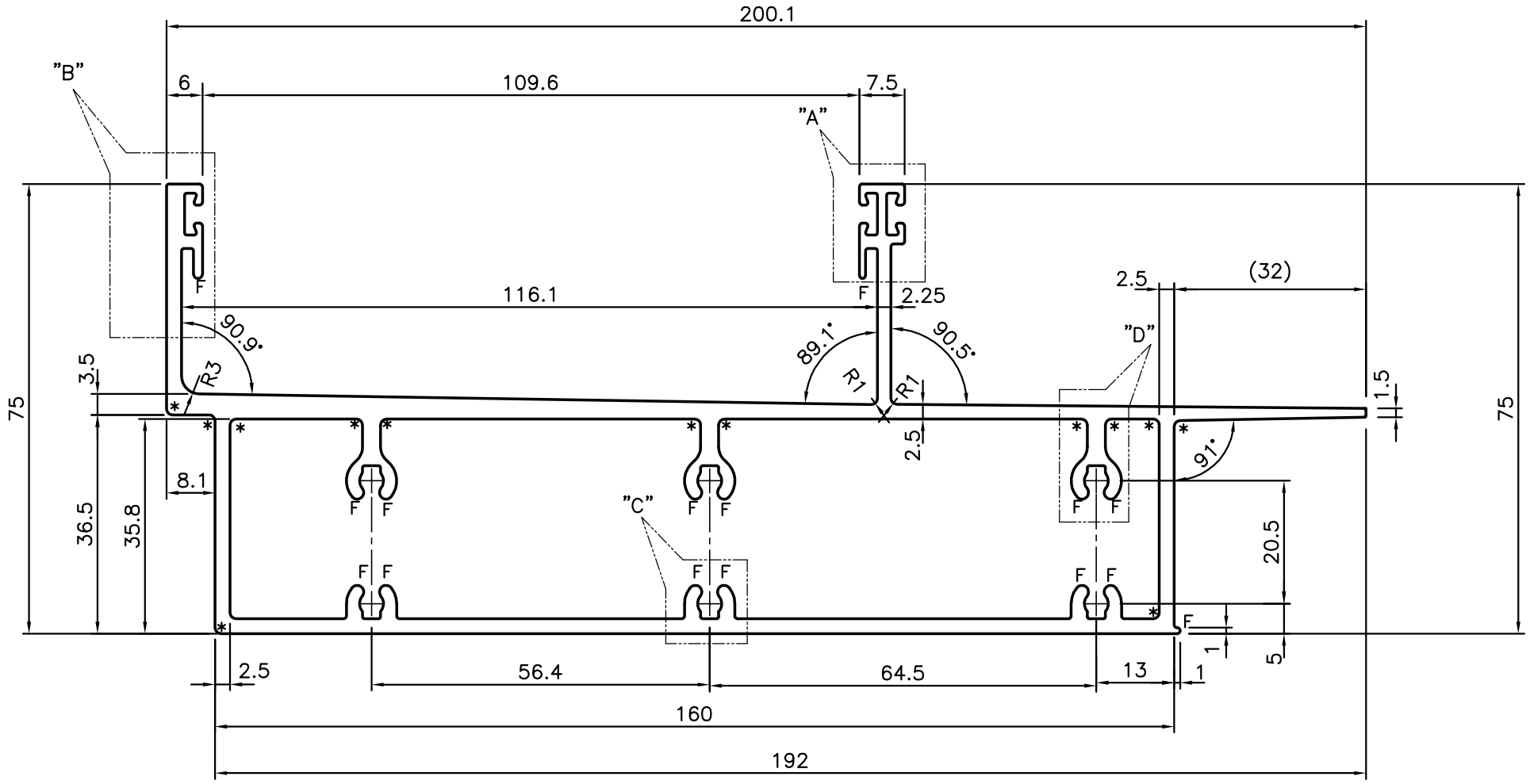

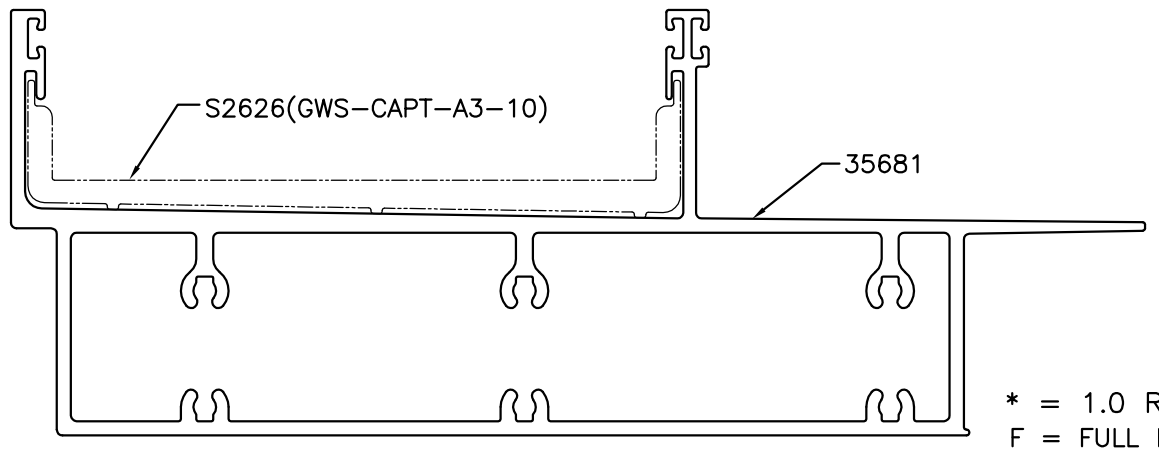

* = 1.0 RADIUS (13 PLACES)
F = FULL RADIUS (11 PLACES)

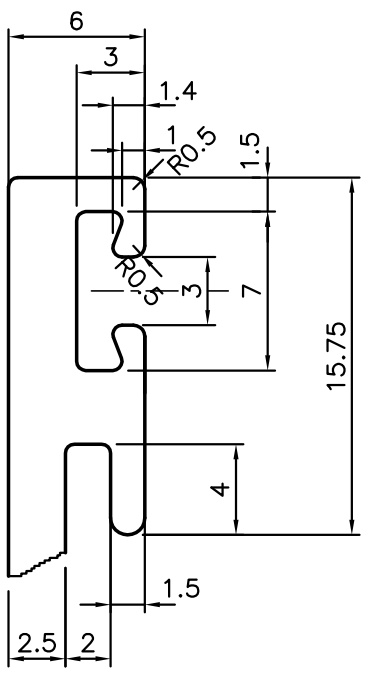

DETAIL OF "B"
SCALE 3:1

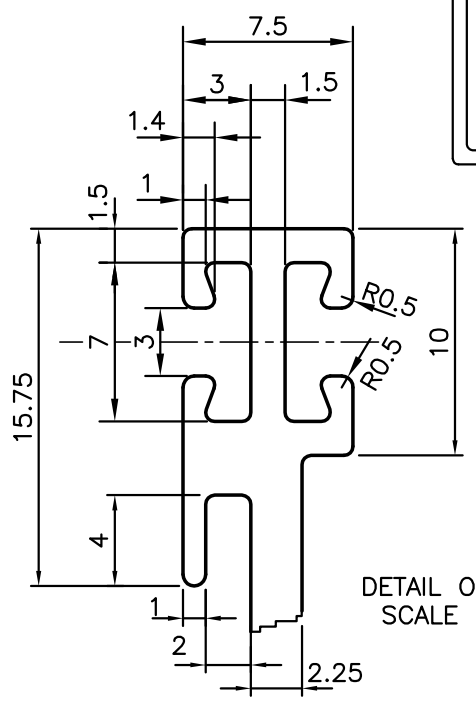

DETAIL OF "A"
SCALE 3:1

SYMBOL OF QUALITY AN ISO 9001 COMPANY	*JINDAL ALUMINIUM LTD.* *BANGALORE-560073 (INDIA)*		NAME	DATE
		DRAWN	J.P.KAUSHIK	13-10-2010
		CHECKED		
		APPROVED	S.S.GARG	15-10-2010
1. ALL DIMENSIONS ARE IN mm. 2. ROUND OFF ALL SHARP CORNERS WITH 0.40 mm. 3. TOLERANCES WILL BE AS PER IS:6477-1983 UNLESS OTHERWISE SPECIFIED		SCALE		1:1
		AREA mm^2		1595.303
		PERIMETER mm.		693.098
		WEIGHT kg/m		4.307
PARTY'S NAME	GWS ENGINEERS & FABRICATORS PVT.LTD.,MUMBAI	DRAWING No.		SECTION No.
PARTY'S DRAWING No.	GWS-CAPT-A3-DIA-16	P-10369-2		-
ALLOY & TEMPER	HE9 WP	S2727		S2727
		35681		35681
DESCRIPTION	CURTAIN WALL (GUTTER SECTION)			