P–10529–3
S2790
35700

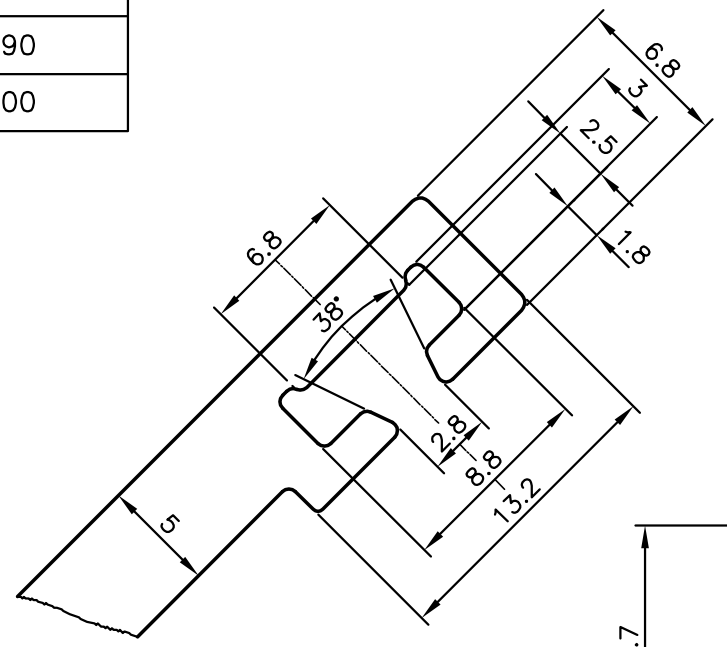

DETAIL OF "A"
SCALE 3:1

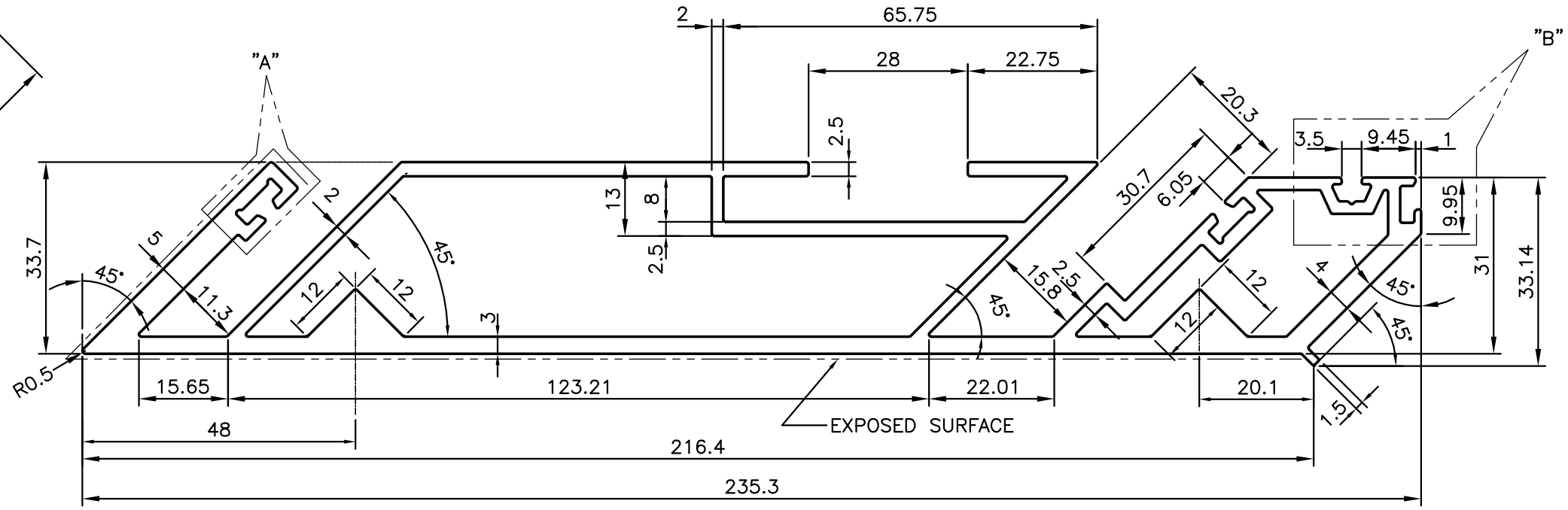

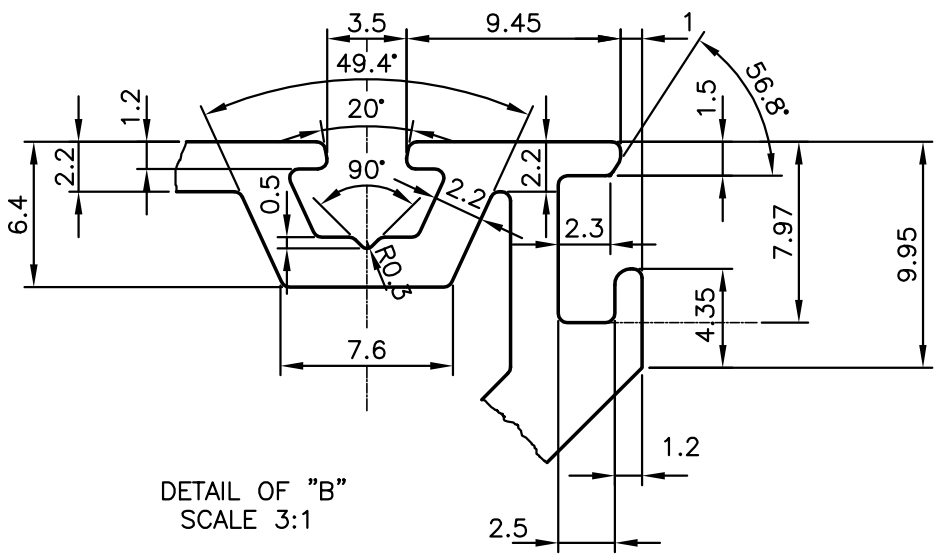

DETAIL OF "B"
SCALE 3:1

TOLERANCES ON OVERALL WIDTHS & WIDTHS ACROSS FLATS OF BARS, & REGULAR SECTIONS			
UPTO 6.40mm – ±0.20 UPTO 10.0mm – ±0.23 UPTO 12.0mm – ±0.25 UPTO 16.0mm – ±0.28 UPTO 25.0mm – ±0.30	UPTO 32.0mm – ±0.38 UPTO 50.0mm – ±0.46 UPTO 60.0mm – ±0.53 UPTO 80.0mm – ±0.69 UPTO 100.0mm – ±0.75	UPTO 120.0mm – ±0.85 UPTO 160.0mm – ±1.02 UPTO 200.0mm – ±1.14 UPTO 250.0mm – ±1.40 UPTO 300.0mm – ±1.65	UPTO 320.00mm – ±1.70

JINDAL
SYMBOL OF QUALITY
AN ISO 9001 COMPANY

JINDAL ALUMINIUM LTD.
BANGALORE–560073 (INDIA)

	NAME	DATE
DRAWN	J.P.KAUSHIK	01–12–2010
CHECKED		
APPROVED	J.N.RAI	08–12–2010

1. ALL DIMENSIONS ARE IN mm.
2. ROUND OFF ALL SHARP CORNERS WITH 0.40 mm.
3. TOLERANCES WILL BE AS PER IS:6477–1983 UNLESS OTHERWISE SPECIFIED

SCALE	1:1
AREA mm^2	1896.811
PERIMETER mm.	818.566
WEIGHT kg/m	5.121

		DRAWING No.	SECTION No.
PARTY'S NAME	SP FABRICATORS PVT. LTD., MUMBAI		
PARTY'S DRAWING No.	AL–755	P–10529–3	–
ALLOY & TEMPER	6063 T6	S2790 35700	S2790 35700
DESCRIPTION	OUTWARD CORNER (FEMALE)		