P–11852
S3376
35715

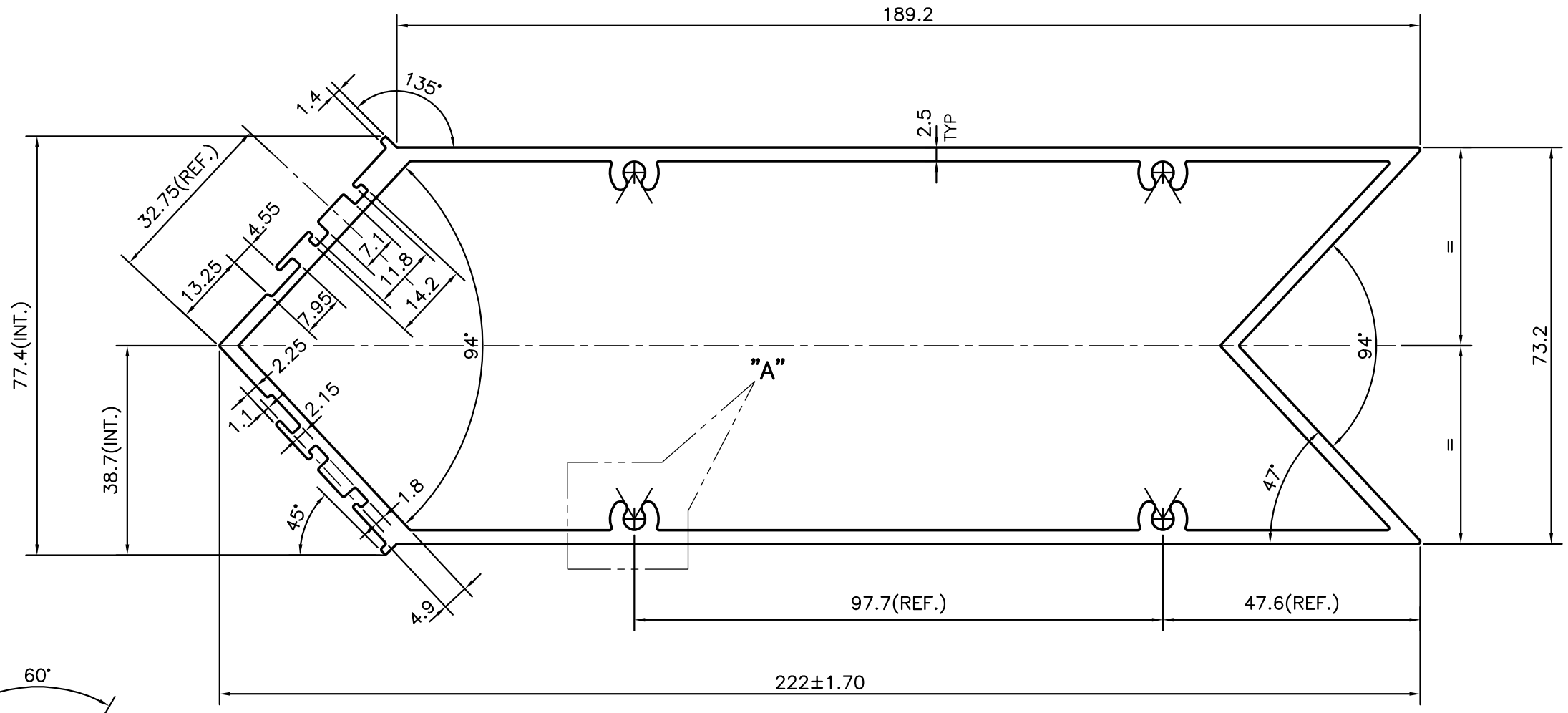

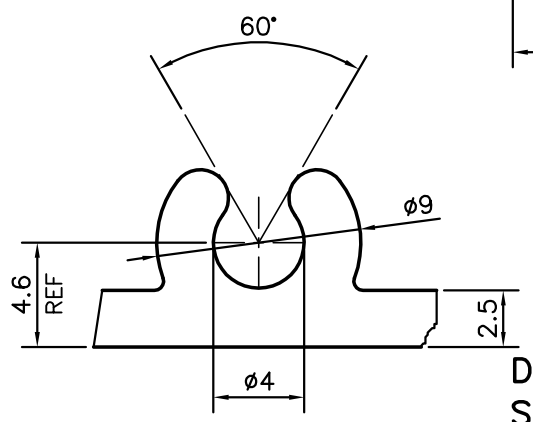

DETAIL"A"
SCALE 3:1

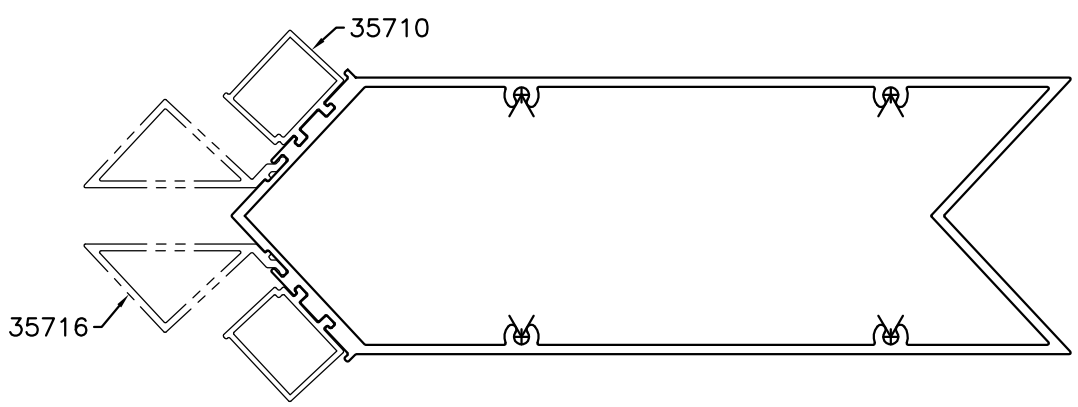

JINDAL SYMBOL OF QUALITY AN ISO 9001 COMPANY	*JINDAL ALUMINIUM LTD.* *BANGALORE–560073 (INDIA)*		NAME	DATE
1. ALL DIMENSIONS ARE IN mm. 2. ROUND OFF ALL SHARP CORNERS WITH 0.40 mm. 3. TOLERANCES WILL BE AS PER BS:EN–755–9 UNLESS OTHERWISE SPECIFIED		DRAWN	J.P.KAUSHIK	22–06–2012
		CHECKED		
		APPROVED	S.S.GARG	05–07–2012
		SCALE		1:1
		AREA mm^2		1620.413
		PERIMETER mm.		632.872
		WEIGHT kg/m		4.375
PARTY'S NAME	SP FABRICATOR PVT. LTD., MUMBAI	DRAWING No.		SECTION No.
PARTY'S DRAWING No.	AL–842	P–11852		–
ALLOY & TEMPER	6063 T6	S3376		S3376
		35715		35715
DESCRIPTION	CURTAIN WALL SECTION–CORNER MULLION			