P–11855
S3379
35718

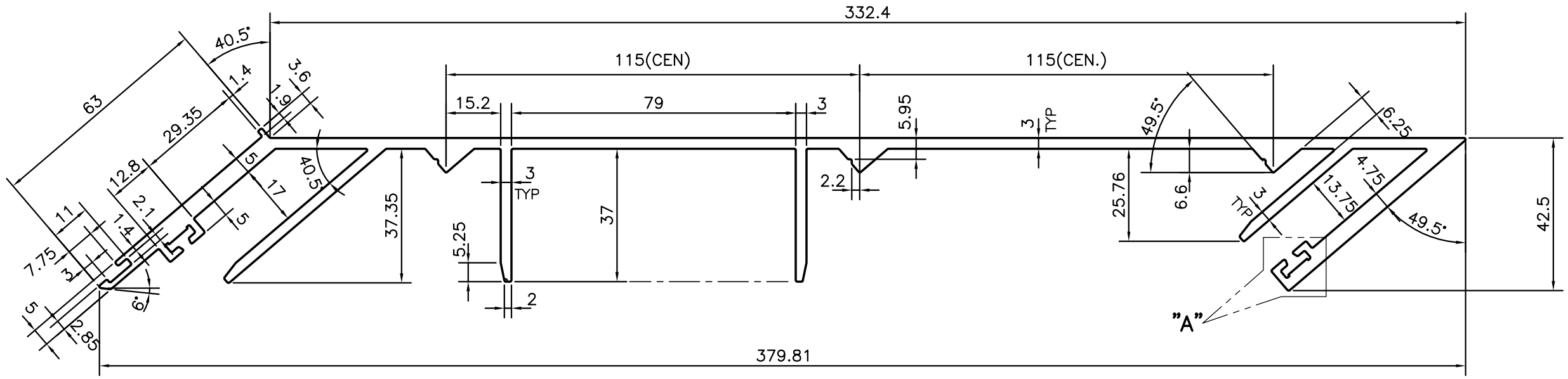

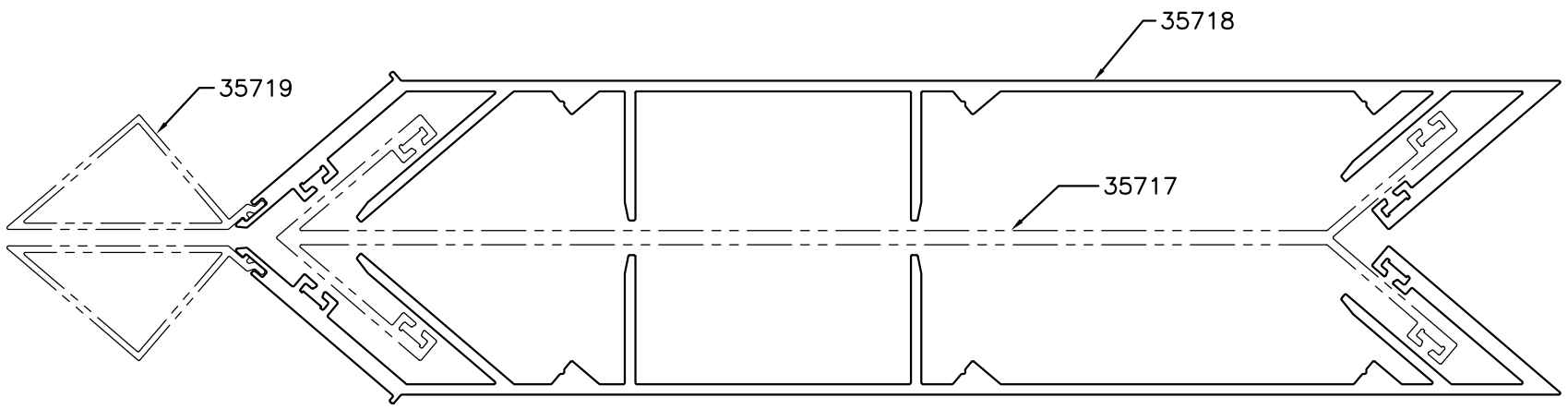

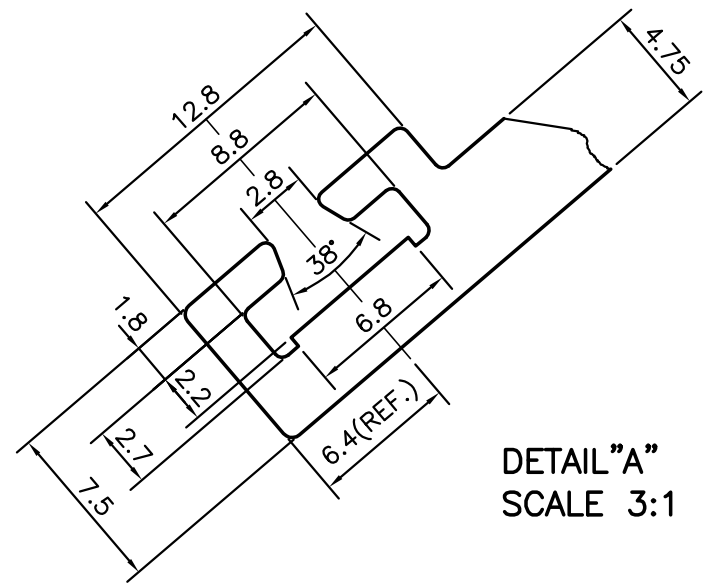

DETAIL"A"
SCALE 3:1

JINDAL SYMBOL OF QUALITY AN ISO 9001 COMPANY	*JINDAL ALUMINIUM LTD.* *BANGALORE–560073 (INDIA)*		NAME	DATE
		DRAWN	J.P.KAUSHIK	22–06–2012
		CHECKED		
		APPROVED	S.S.GARG	05–07–2012
1. ALL DIMENSIONS ARE IN mm. 2. ROUND OFF ALL SHARP CORNERS WITH 0.40 mm. 3. TOLERANCES WILL BE AS PER BS:EN–755–9 UNLESS OTHERWISE SPECIFIED		SCALE		0.75:1
		AREA mm^2		2230.357
		PERIMETER mm.		1316.123
PARTY'S NAME	SP FABRICATOR PVT. LTD., MUMBAI	WEIGHT kg/m		6.022
		DRAWING No.		SECTION No.
PARTY'S DRAWING No.	AL–844	P–11855		–
ALLOY & TEMPER	6063 T6	S3379		S3379
		35718		35718
DESCRIPTION	CURTAIN WALL SECTION–CORNER MULLION			