P–11954
S3440
35736

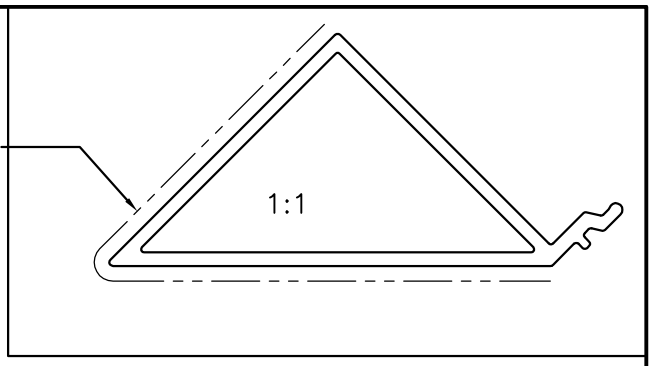

MATCHING SECTION No:– 35738

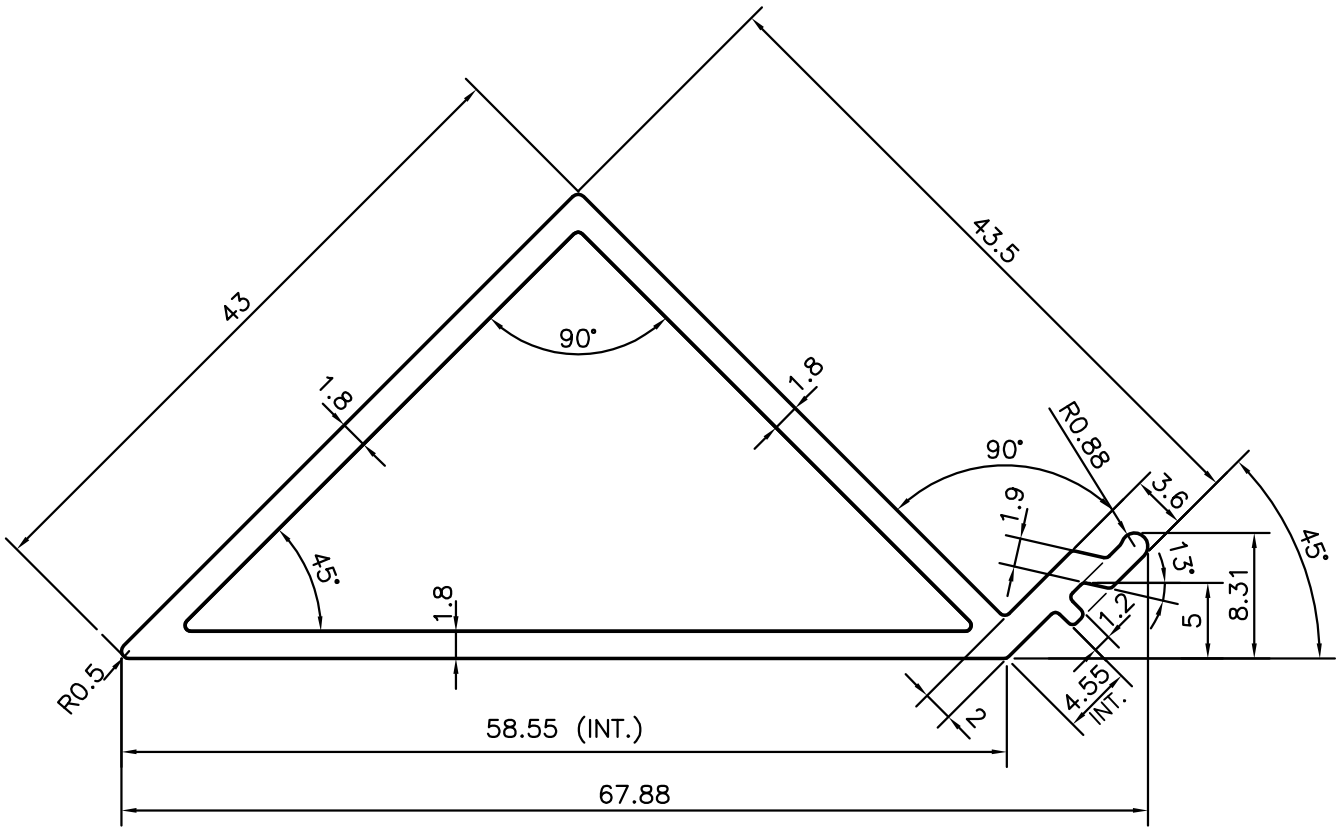

			NAME	DATE
JINDAL SYMBOL OF QUALITY AN ISO 9001 COMPANY	*JINDAL ALUMINIUM LTD.* *BANGALORE–560073 (INDIA)*	DRAWN	J.P.KAUSHIK	11–08–2012
		CHECKED		
		APPROVED	*S.S.GARG*	22–08–2012

1. ALL DIMENSIONS ARE IN mm.
2. ROUND OFF ALL SHARP CORNERS WITH 0.40 mm.
3. TOLERANCES WILL BE AS PER,BS:EN–755–9 UNLESS OTHERWISE SPECIFIED

SCALE	2:1
AREA mm^2	271.009
PERIMETER mm.	169.012
WEIGHT kg/m	0.732

PARTY'S NAME	SP FABRICATOR PVT. LTD., MUMBAI
PARTY'S DRAWING No.	AL–857
ALLOY & TEMPER	6063 T6
DESCRIPTION	CURTAIN WALL SECTION–CORNER ADAPTER

DRAWING No.	SECTION No.
P–11954	–
S3440	S3440
35736	35736