P–11956
S3442
35738

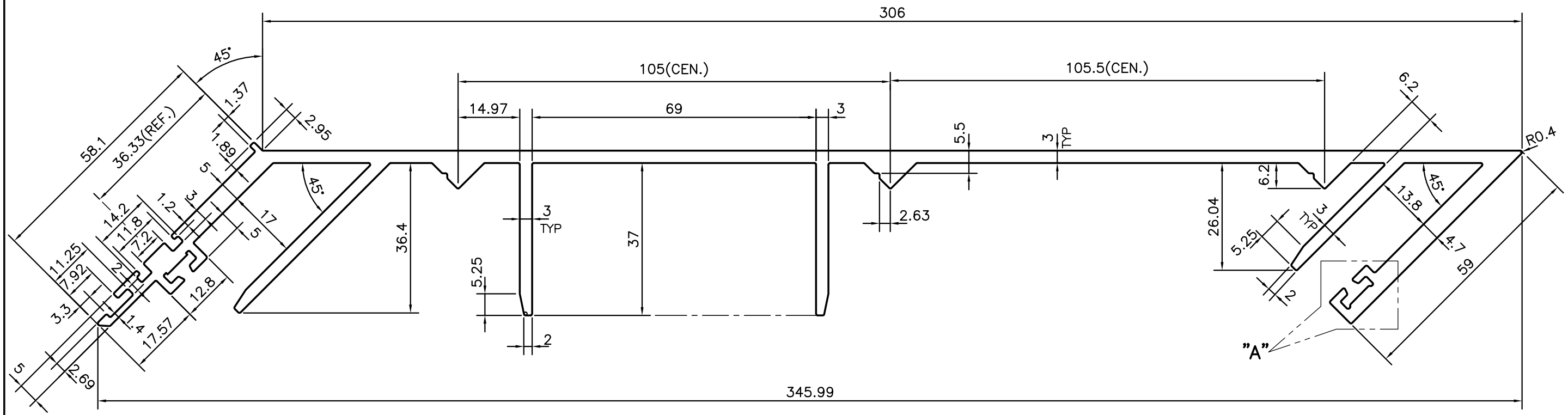

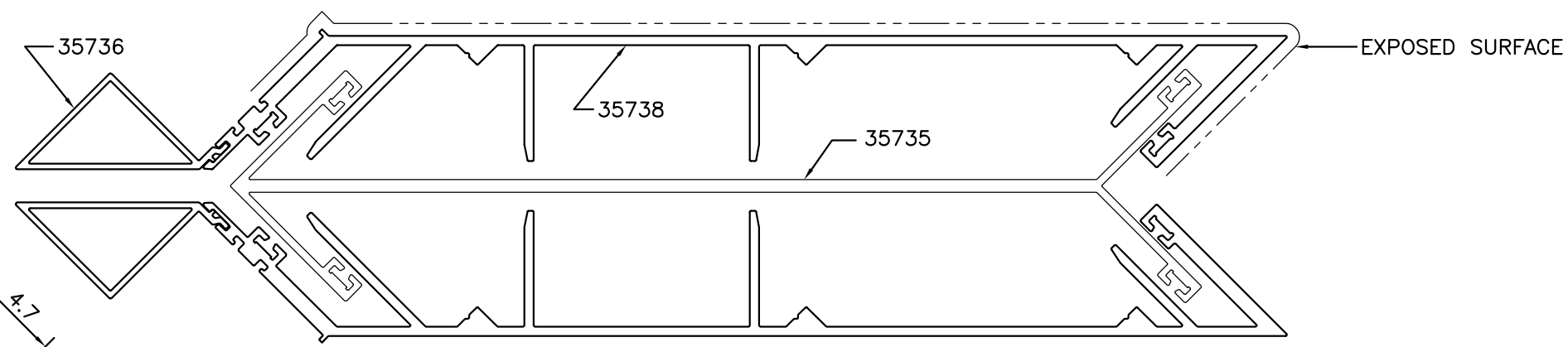

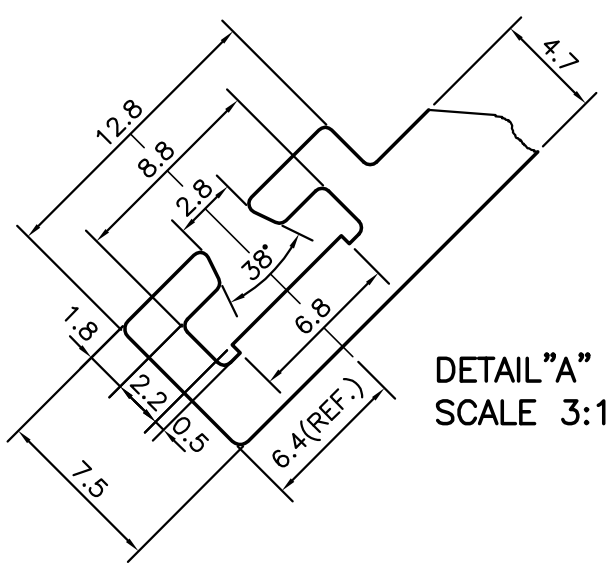

DETAIL"A"
SCALE 3:1

JINDAL SYMBOL OF QUALITY AN ISO 9001 COMPANY	*JINDAL ALUMINIUM LTD.* *BANGALORE–560073 (INDIA)*		NAME	DATE
		DRAWN	J.P.KAUSHIK	11–08–2012
		CHECKED		
		APPROVED	*S.S.GARG*	22–08–2012
1. ALL DIMENSIONS ARE IN mm. 2. ROUND OFF ALL SHARP CORNERS WITH 0.40 mm. 3. TOLERANCES WILL BE AS PER BS:EN–755–9 UNLESS OTHERWISE SPECIFIED		SCALE		1:1
		AREA mm^2		2037.354
		PERIMETER mm.		1240.79
		WEIGHT kg/m		5.501
PARTY'S NAME	SP FABRICATOR PVT. LTD., MUMBAI	DRAWING No.		SECTION No.
PARTY'S DRAWING No.	AL–855	P–11956		–
ALLOY & TEMPER	6063 T6	S3442		S3442
		35738		35738
DESCRIPTION	CURTAIN WALL SECTION–CORNER MULLION			