P–11965	
S3451	
35746	

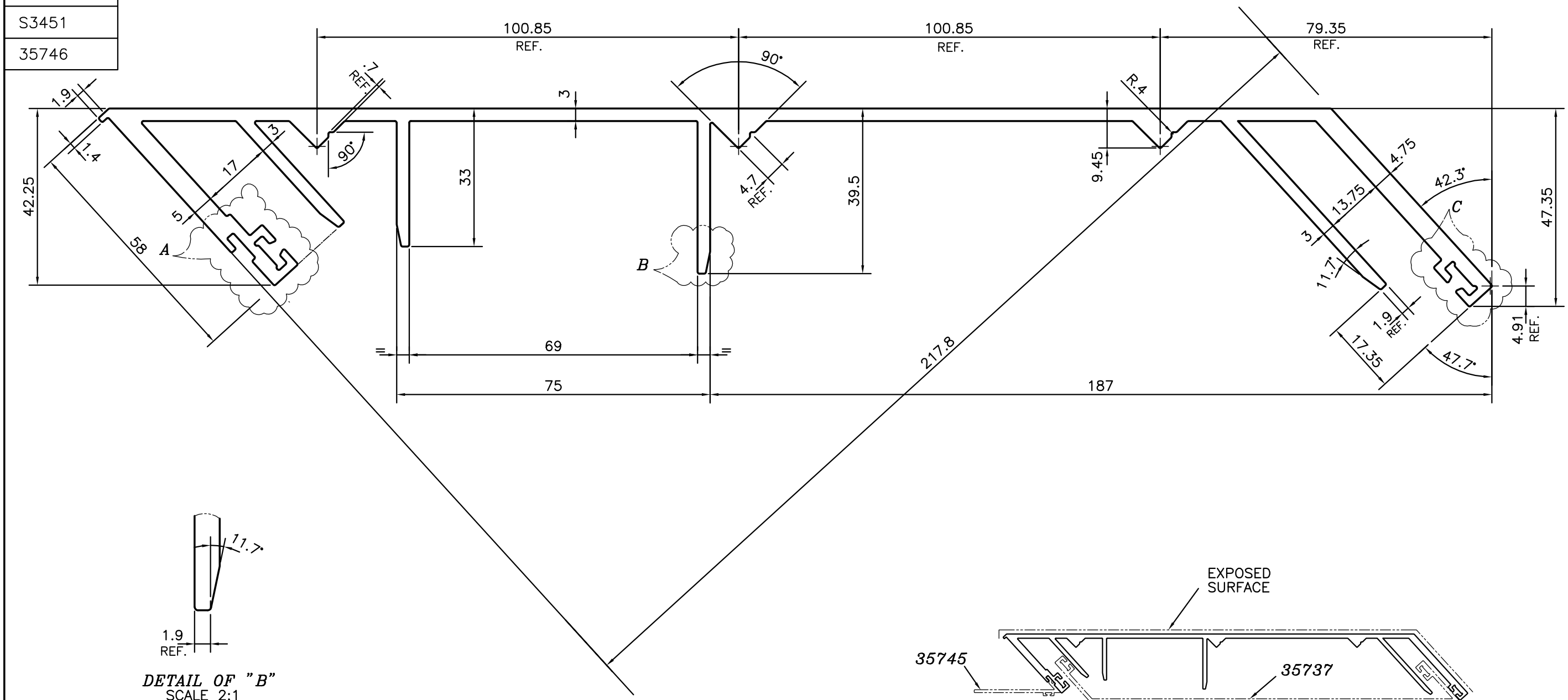

DETAIL OF "B"
SCALE 2:1

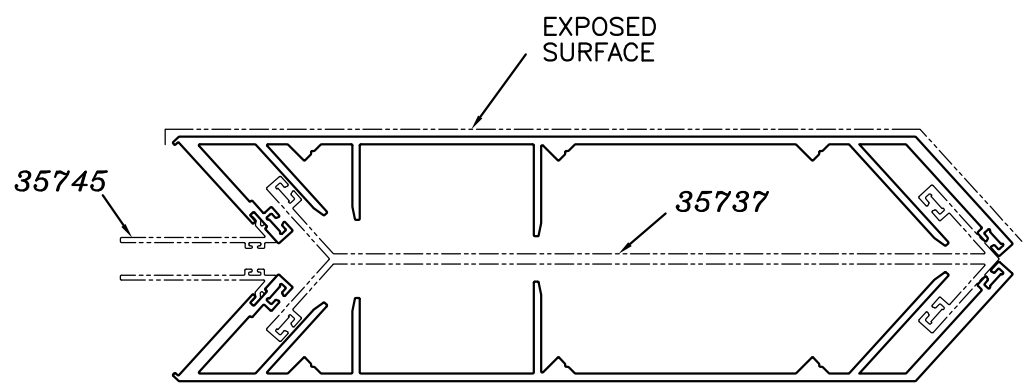

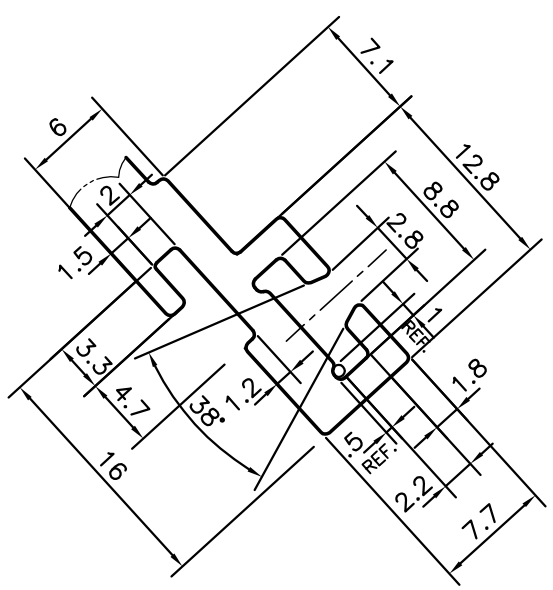

DETAIL OF "A"
SCALE 2:1

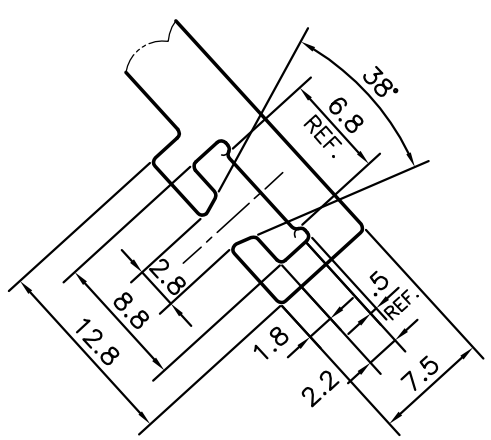

DETAIL OF "C"
SCALE 2:1

			NAME	DATE
JINDAL SYMBOL OF QUALITY AN ISO 9001 COMPANY	*JINDAL ALUMINIUM LTD.* *BANGALORE–560073 (INDIA)*	DRAWN	*PARVESH*	11–08–2012
		CHECKED		
		APPROVED	*S.S.GARG*	22–08–2012

1. ALL DIMENSIONS ARE IN mm.
2. ROUND OFF ALL SHARP CORNERS WITH 0.40 mm.
3. TOLERANCES WILL BE AS PER BS:EN–755–9, UNLESS OTHERWISE SPECIFIED

SCALE	1:1
AREA mm^2	2008.891
PERIMETER mm.	1189.437
WEIGHT kg/m	5.424

PARTY'S NAME	SP FABRICATORS PVT. LTD., MUMBAI
PARTY'S DRAWING No.	AL–849
ALLOY & TEMPER	6063 T6
DESCRIPTION	CURTAIN WALL SECTION – CORNER MULLION

DRAWING No.	SECTION No.
P–11965	–
S3451	S3451
35746	35746