P–10940
S2929
35760

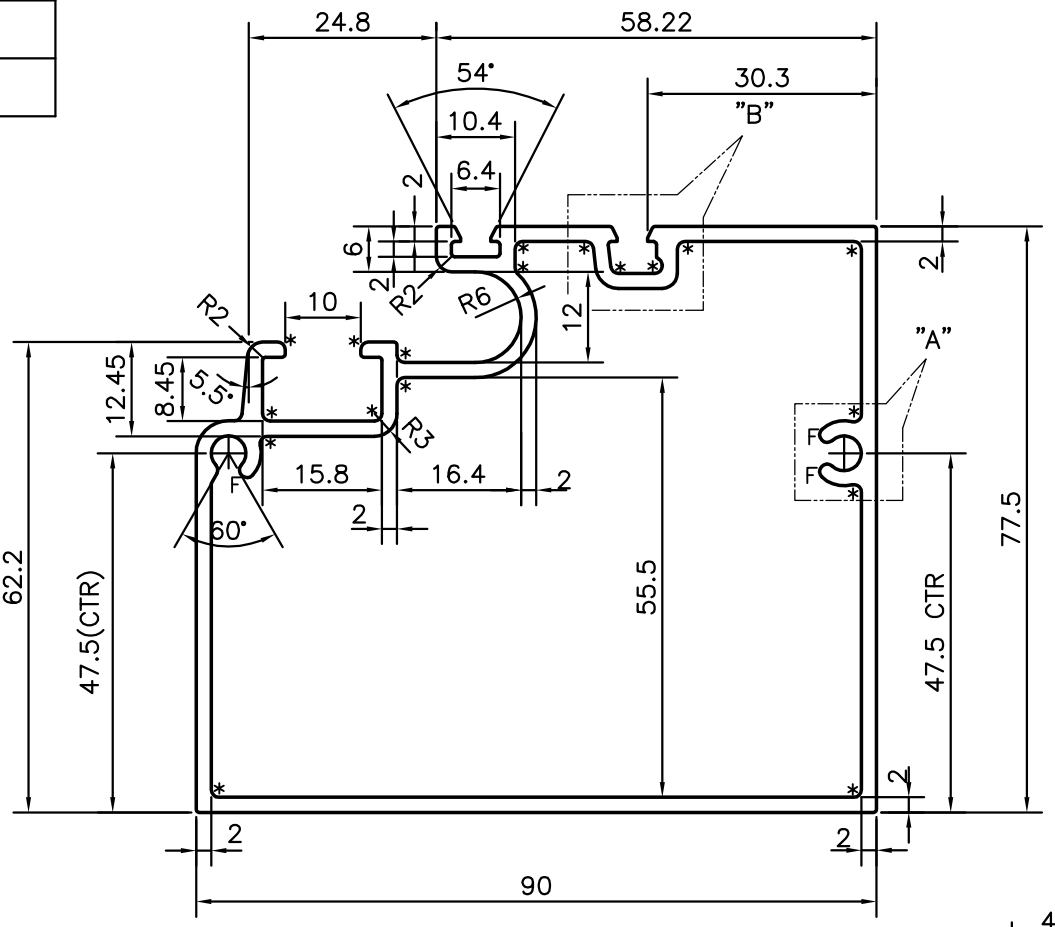

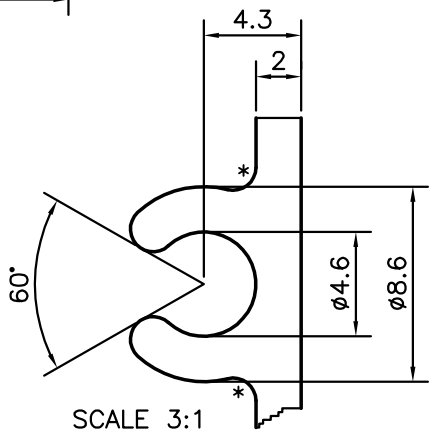

SCALE 3:1
DETAIL OF "A"

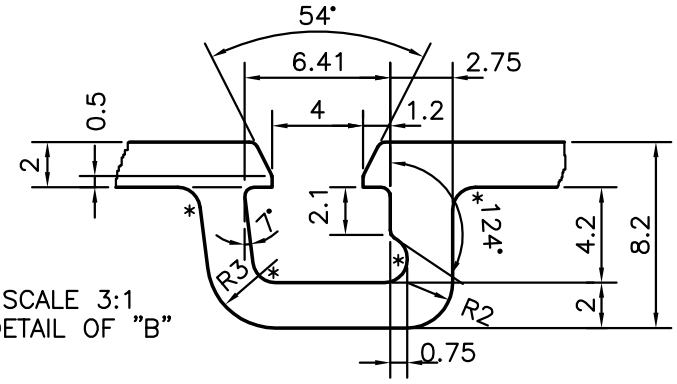

SCALE 3:1
DETAIL OF "B"

* = 1.0 RADIUS (17 PLACES)
F = FULL RADIUS (4 PLACES)

SYMBOL OF QUALITY
AN ISO 9001 COMPANY

JINDAL ALUMINIUM LTD.

BANGALORE–560073 (INDIA)

	NAME	DATE
DRAWN	J.P.KAUSHIK	05–05–2011
CHECKED		
APPROVED	S.S.GARG	19–05–2011

1. ALL DIMENSIONS ARE IN mm.
2. ROUND OFF ALL SHARP CORNERS WITH 0.40 mm.
3. TOLERANCES WILL BE AS PER IS:6477–1983 UNLESS OTHERWISE SPECIFIED

SCALE	1:1
AREA mm^2	788.25
PERIMETER mm.	407.997
WEIGHT kg/m	2.128

PARTY'S NAME	ALUMINIUM IINNOVATIONS, BANGALORE
PARTY'S DRAWING No.	AS PER DRAWING
ALLOY & TEMPER	63400 WP
DESCRIPTION	CURTAIN WALL SECTION

DRAWING No.	SECTION No.
P–10940	–
S2929	S2929
35760	35760